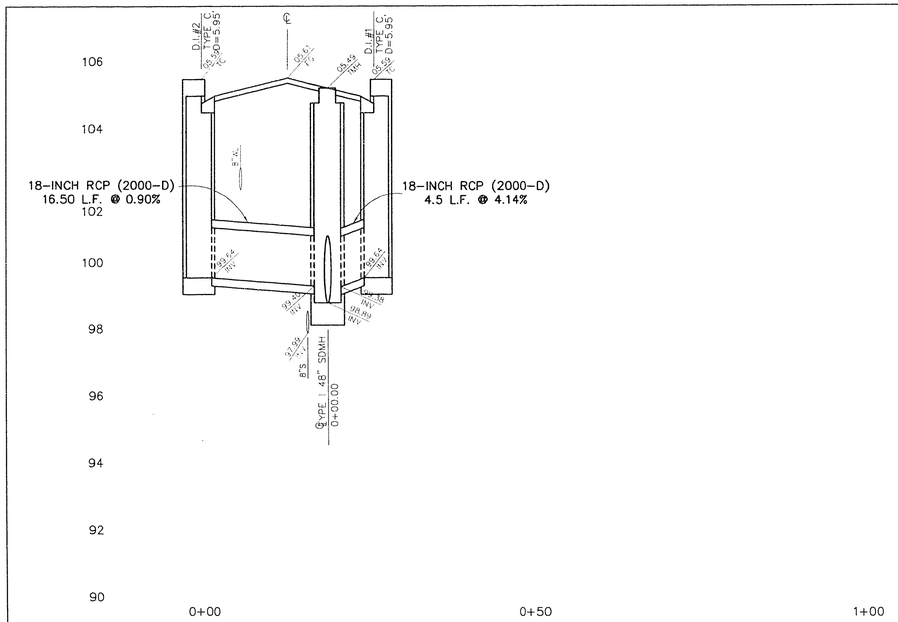

STORM DRAIN LATERAL

SCALE: HORIZ. 1" = 10'
VERT. 1" = 2'

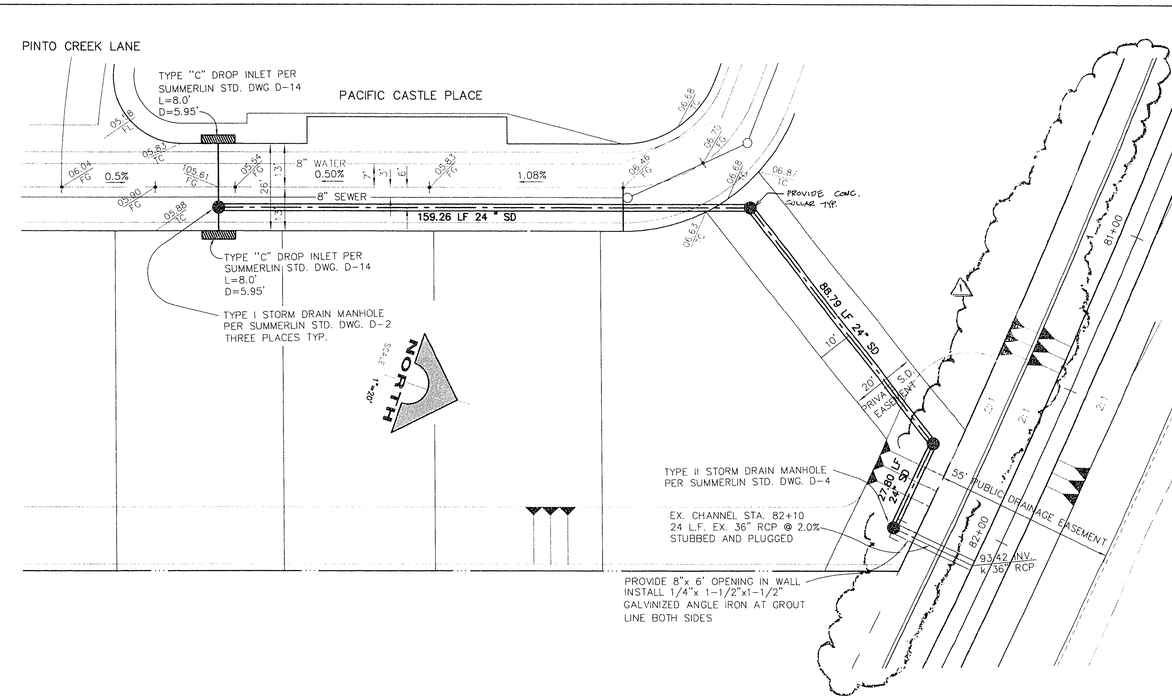

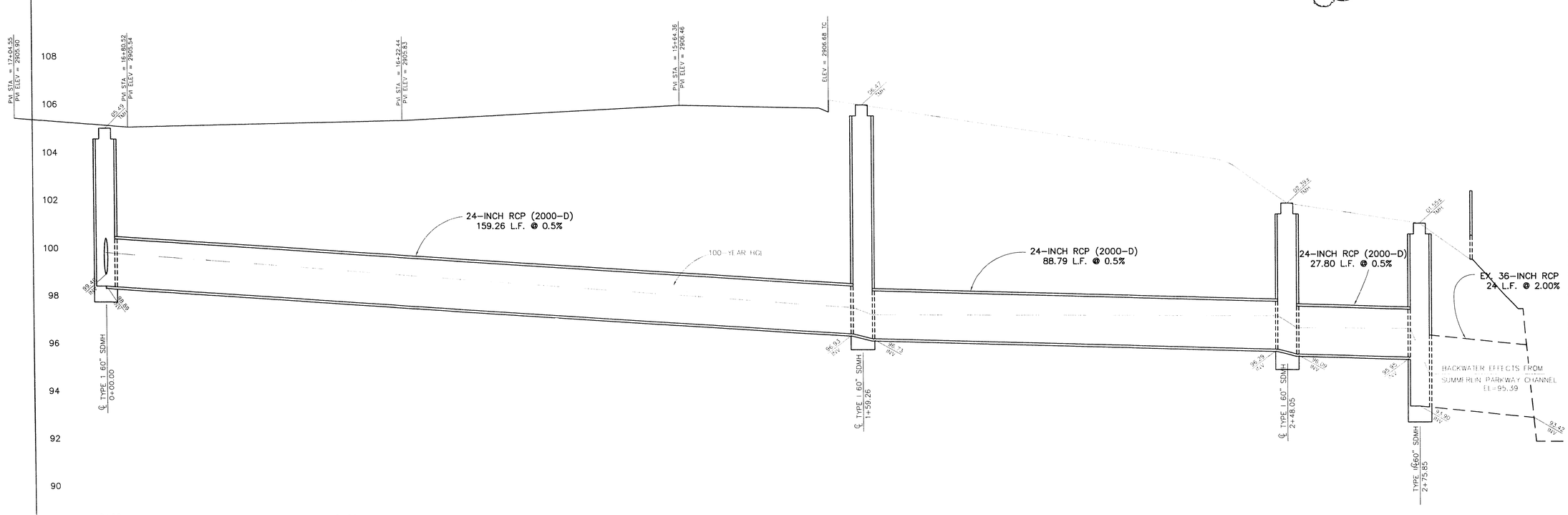

STORM DRAIN PROFILE

SCALE: HORIZ. 1" = 10'
VERT. 1" = 2'

497.951D

PLOTTED: 02/15/99
PARW C18.DWG

NO.	DATE	REVISIONS
1	2/15/99	
2		
3		

10170
P.E. NO. DATE

REGISTERED PROFESSIONAL ENGINEER STATE OF NEVADA
GREGORY PATCH
No. 9278
2/15/99

G.C. WALLACE, INC.
Engineering/Architecture
1555 SOUTH RANCHO DR., LAS VEGAS, NEVADA 89102
(702) 383-2239

PACIFIC HOMES
PARCEL W
STORM DRAIN PLAN & PROFILE

SHEET
C18
OF 19 SHEETS

327Y-4381