EQUIPMENT PAD NOTES

1. PAD SIZE SHALL BE AS SHOWN OR AS REQUIRED BY THE EQUIPMENT DIMENSIONS, AND APPROVED BY THE ENGINEER.
2. THE SIZE, NUMBER, LOCATION, AND THREAD PROJECTION OF THE ANCHOR BOLTS SHALL BE AS SHOWN OR AS REQUIRED BY THE EQUIPMENT MANFACTURER, AND APPROVED BY THE ENGINEER. ANCHOR BOLTS SHALL BE HELD IN POSITION WITH A TEMPLATE WHILE PAD IS BEING POURED. COAT BOLT THREAD PROJECTION WITH LUBRICANT.
3. EQUIPMENT PADS SHALL BE INSTALLED LEVEL UNLESS SPECIFIED OTHERWISE.
4. WEDGES OR SHIMS SHALL BE USED TO SUPPORT THE BASE IN ACCORDANCE WITH THE EQUIPMENT MANUFACTURERS INSTRUCTIONS. TEMPORARY LEVELING NUTS AND JACK SCREWS SHALL BE BACKED OFF. AFTER GROUTING, THE WEDGES OR SHIMS SHALL NOT BE EXPOSED TO VIEW.
5. HEIGHT OF PAD SHALL BE AS SHOWN OR AS REQUIRED FOR 1 1/2" ANCHOR BOLT CLEARANCE ABOVE SLAB. USE TYPE B PAD WHERE ANCHOR BOLT CLEARANCE CANNOT BE MAINTAINED.
6. GROUT SHALL BE NON-SHRINK TYPE, FLOWABLE CONSISTENCY, IN ACCORDANCE WITH SPECIFICATION SECTION "GROUT".

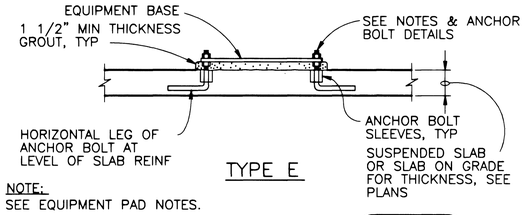

TYPE E

NOTE:
SEE EQUIPMENT PAD NOTES.

EQUIPMENT PAD (3010)
NTS

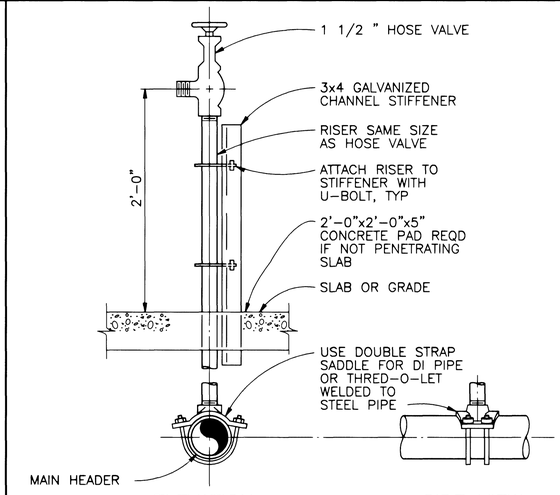

ELEVATION SIDE VIEW

EXTERIOR HOSE VALVE (15150)
NTS

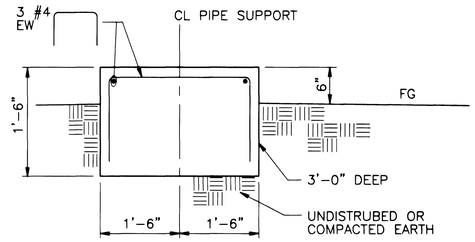

PIPE SUPPORT FOUNDATION (15499)
NTS

DIMENSION TABLE						
PIPE SIZE	A	B	C	D	E MIN	E MAX
2-1/2"	2-1/2"	3-1/2"	9"	1-1/2"	8"	13"
3"	2-1/2"	3-3/4"	9"	1-1/2"	8-1/4"	13-1/4"
3-1/2"	2-1/2"	4"	9"	1-1/2"	8-1/2"	13-1/2"
4"	3"	4-1/4"	9"	2-1/2"	9-1/4"	14"
5"	3"	4-7/8"	9"	2-1/2"	10"	14-3/4"
6"	3"	5-1/2"	9"	2-1/2"	10-1/2"	15-1/4"
8"	3"	6-7/8"	9"	2-1/2"	11-3/4"	16-1/2"
10"	3"	8-1/2"	9"	2-1/2"	13-1/2"	18-1/4"
12"	3"	9-15/16"	9"	2-1/2"	15"	19-3/4"
14"	4"	10-15/16"	11"	3"	16-1/4"	20-3/4"
16"	4"	12-3/8"	11"	3"	17-3/4"	22-1/4"
18"	6"	13-7/8"	13-1/2"	3-1/2"	19-1/2"	24"
20"	6"	15-3/8"	13-1/2"	3-1/2"	21"	25-1/2"
24"	6"	17-15/16"	13-1/2"	4"	23-3/4"	28-1/4"
30"	6"	21-5/16"	13-1/2"	4"	27"	31-1/2"
32"	6"	22-1/2"	13-1/2"	4"	28-1/4"	32-3/4"
36"	6"	24-1/2"	13-1/2"	4"	30-1/4"	34-3/4"

DIMENSION TABLE			
PIPE SIZE	A	B	C
4"	3"	4-3/16"	9"
5"	3"	4-13/16"	9"
6"	3"	5-7/16"	9"
8"	3"	6-15/16"	9"
10"	3"	8-7/16"	9"
12"	3"	9-15/16"	9"
14"	4"	10-15/16"	11"
16"	4"	12-3/8"	11"
18"	4"	13-7/8"	11"
20"	6"	15-3/8"	13-1/2"
22"	6"	16-5/8"	13-1/2"
24"	6"	17-15/16"	13-1/2"
26"	6"	19-1/8"	13-1/2"
30"	6"	21-5/16"	13-1/2"
32"	6"	22-1/2"	13-1/2"
36"	6"	24-1/2"	13-1/2"

NOTES:
1. PROVIDE HALF ROUND RIGID INSULATION AND INSULATION PROTECTION SHIELD, SIMILAR TO B-LINE FIG B-3151, OR GRINNELL FIG. 167.
2. PROVIDE NEOPRENE WAFFLE ISOLATION PAD, SIMILAR TO MASON TYPE 'W' OR KORFUND KORPAD 40, UNDER SUPPORT FOOT WHEN PIPING IS ISOLATED OR SUPPORT IS ADJACENT TO MECHANICAL EQUIPMENT.
3. FOR BASE, HEIGHT AND FLANGE DIMENSIONS, SEE TABLE.

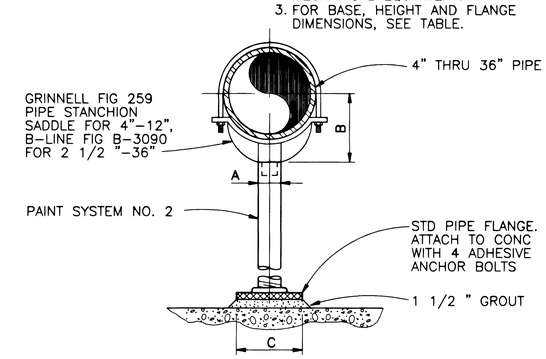

PIPE SUPPORT (15501)
NTS

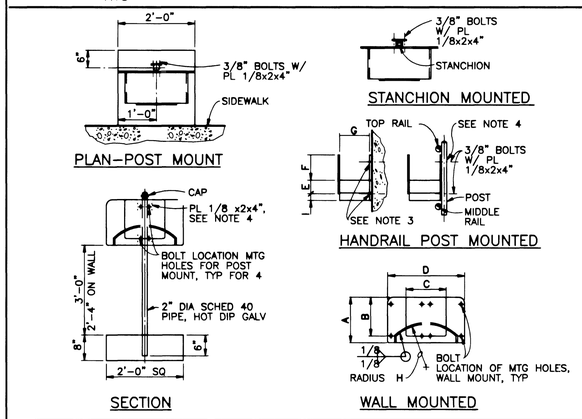

RACK TYPE	DIMENSION IN INCHES								
	A	B	C	D	E	F	G	H	I
TYPE A-3/4"&1" HOSE	10-1/2	9	9	18	3	6	7-1/2	9-3/4	1-1/2
TYPE B-1 1/2" HOSE	14	12	12	24	4	8	10	13	2

NOTES:
1. INTERIOR UNITS SHALL BE FABRICATED FROM 1/8" A-36 STEEL PLATE AND ENTIRE UNIT SHALL BE HOT DIP GALVANIZED AFTER FABRICATION.
2. EXTERIOR UNITS SHALL BE FABRICATED FROM 3/16" 6061-T6 ALUMINUM ALLOY PLATE.
3. ATTACH TO CONCRETE WALL WITH (4)-1/4" STAINLESS STEEL STUD TYPE WEDGE ANCHORS.
4. ATTACH TO VERTICAL HANDRAIL OR INDIVIDUAL POST WITH PLATES AND (4)-1/4" STAINLESS STEEL BOLTS.
5. ATTACH TO STEEL COLUMN WITH (4)-1/4" ROUND HEAD BOLTS, ONE IN EACH CORNER. INSERT DOUBLE SPACER NUTS BETWEEN COLUMN AND HOSE RACK.

HOSE RACK DETAILS (15018)
NTS

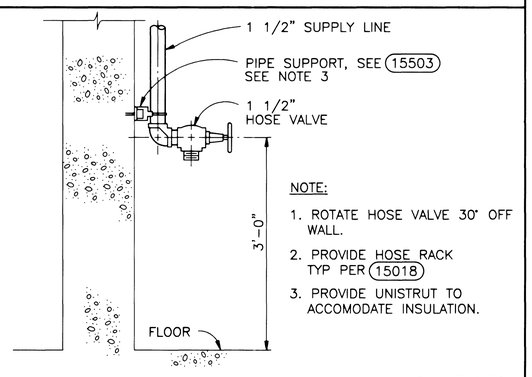

NOTE:
1. ROTATE HOSE VALVE 30° OFF WALL.
2. PROVIDE HOSE RACK TYP PER 15018
3. PROVIDE UNISTRUT TO ACCOMODATE INSULATION.

INTERIOR HOSE VALVE DETAIL (15164)
NTS

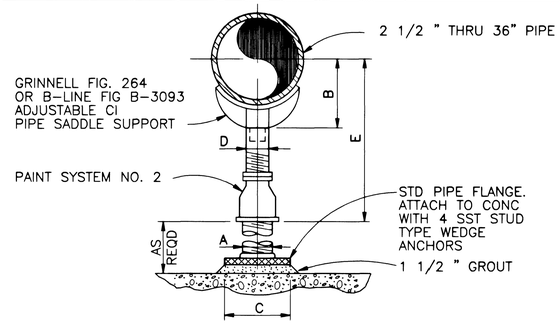

NOTES:
1. PROVIDE HALF ROUND RIGID INSULATION AND INSULATION PROTECTION SHEILD, SIMILAR TO GRINNELL FIGURE 167 OR B-LINE FIGURE B-3151, WHERE PIPING IS INSULATED.
2. PROVIDE NEOPRENE WAFFLE ISOLATION PAD, SIMILAR TO MASON TYPE 'W' OF KORFUND KORPAD 40, UNDER SUPPORT FOOT WHEN PIPING IS ISOLATED OR SUPPORTED IS ADJACENT TO MECHANICAL EQUIPMENT.
3. FOR BASE, HEIGHT AND FLANGE DIMENSIONS, SEE TABLE. DIMENSIONS, SEE TABLE.

PIPE SUPPORT (15500)
NTS

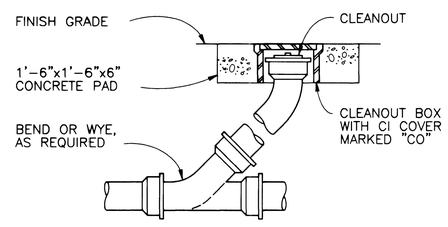

EXTERIOR CLEANOUT DETAIL (15180)
NTS

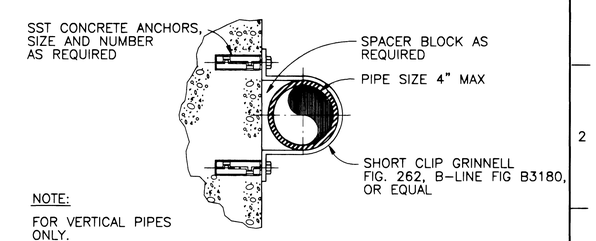

NOTE:
FOR VERTICAL PIPES ONLY.

PIPE SUPPORT (15503)
NTS

Issue No.	Description	Date	Drwn.	Chkd.	Resp. Engr.	Proj. Mgr.
	RECORD DRAWING	7-31-01	BJV	BLE	LS	BJ

35176

PROFESSIONAL ENGINEER, STATE OF NEVADA — BRUCE A. JOHNSON — CIVIL — No. 12642

CH2MHILL
2000 E. FLAMINGO ROAD, SUITE A
LAS VEGAS, NV 89119
702.369.6175

HDR
HDR Engineering, Inc.
770 E. Warm Springs Road
Suite 360
Las Vegas, NV 89119
702-938-6000
BAR LENGTH ON ORIGINAL DRAWING EQUALS ONE INCH. ADJUST SCALE ACCORDINGLY.

Project Manager: B JOHNSON
Designed: L STEEPS
Designed: J PARKER
Checked: C EASTER
Drawn: B NORVILLE

City of Las Vegas
Water Pollution Control Facility Plant Expansion
Contract 20 – Odor Control

STANDARD DETAILS
MECHANICAL

311.48

Date	Project No.	Scale	Drawing No.	Sheet No.
SEPTEMBER 1998	00120-154-141	NTS	MD-1	71 of 76

C20-M001.dwg 09-11-98