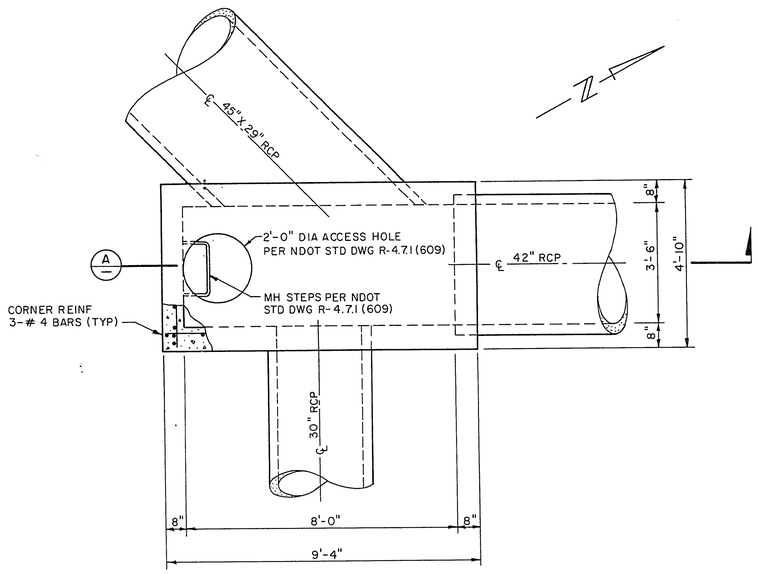

JUNCTION BOX Nº 1 – PLAN (1 / SD2)

SCALE: 1/2"=1'-0"

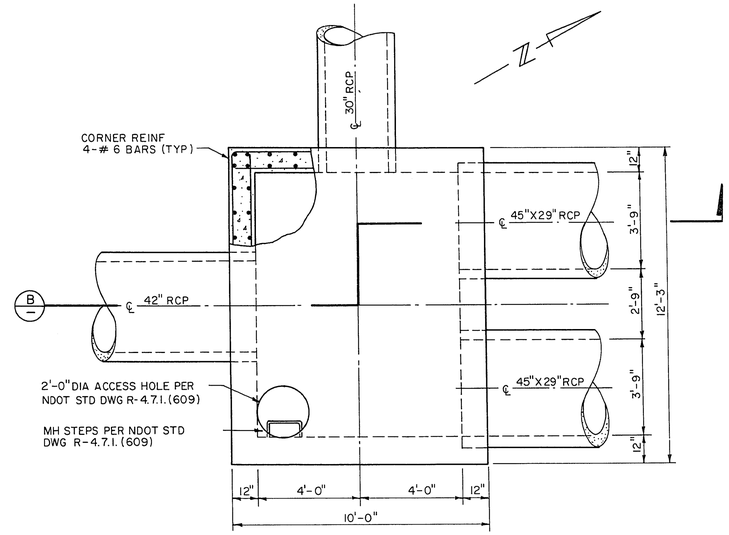

JUNCTION BOX Nº 2 – PLAN (2 / SD2)

SCALE: 3/8"=1'-0"

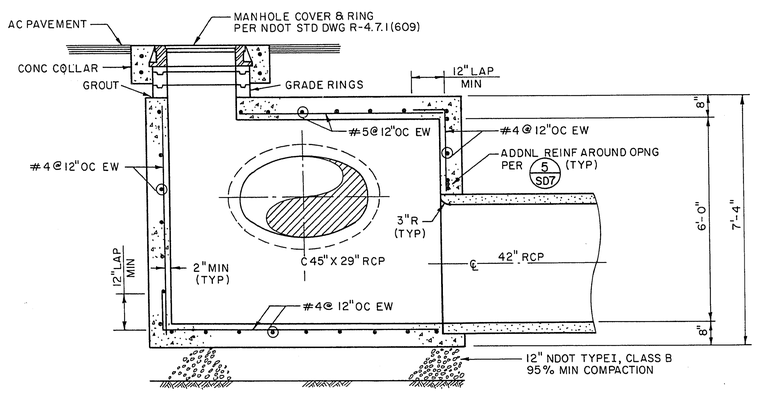

SECTION A

SCALE: 1/2"=1'-0"

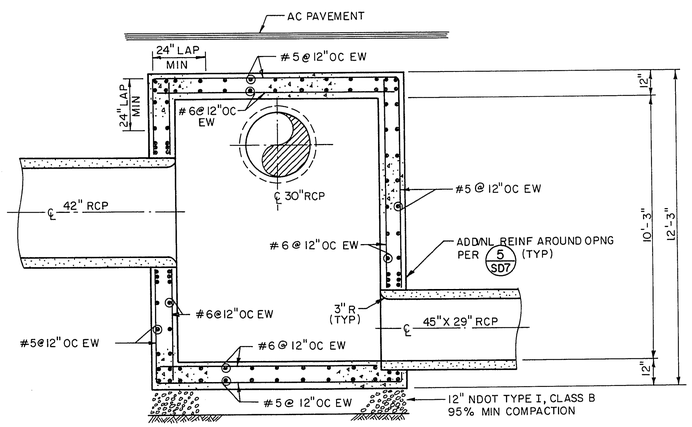

SECTION B

SCALE: 3/8"=1'-0"

RECORD DRAWINGS

CLV DRAWING NO. 107-V2011

REISSUED 10-16-92 WITHOUT REVISION

MARK	DATE	BY	REVISION
1	07/94	BE	RECORD DRAWINGS

DESIGNED: JPM
DRAWN: GM
CHECKED: GPM
PROJECT ENGINEER DATE
PROJECT MANAGER DATE

Boyle Engineering Corporation
consulting engineers
Suite 300
1785 E. Sahara Ave 300
Las Vegas, NV 89104
(702) 731-5511

CITY OF LAS VEGAS
DEPARTMENT OF PUBLIC WORKS

OGDEN AVENUE UNDERPASS AND ROADWAY

JUNCTION BOX Nº1 AND Nº2
DETAILS

DRAWING
SD5
27 OF 125

32-28