GRADING AND DRAINAGE PLAN
PANDA EXPRESS

A PORTION OF THE SOUTHWEST QUARTER OF THE SOUTHWEST QUARTER OF SECTION 29, TOWNSHIP 20 SOUTH, RANGE 62 EAST, M.D.M. , CLARK COUNTY, NEVADA.

A.P.N. # 140-29-401-003

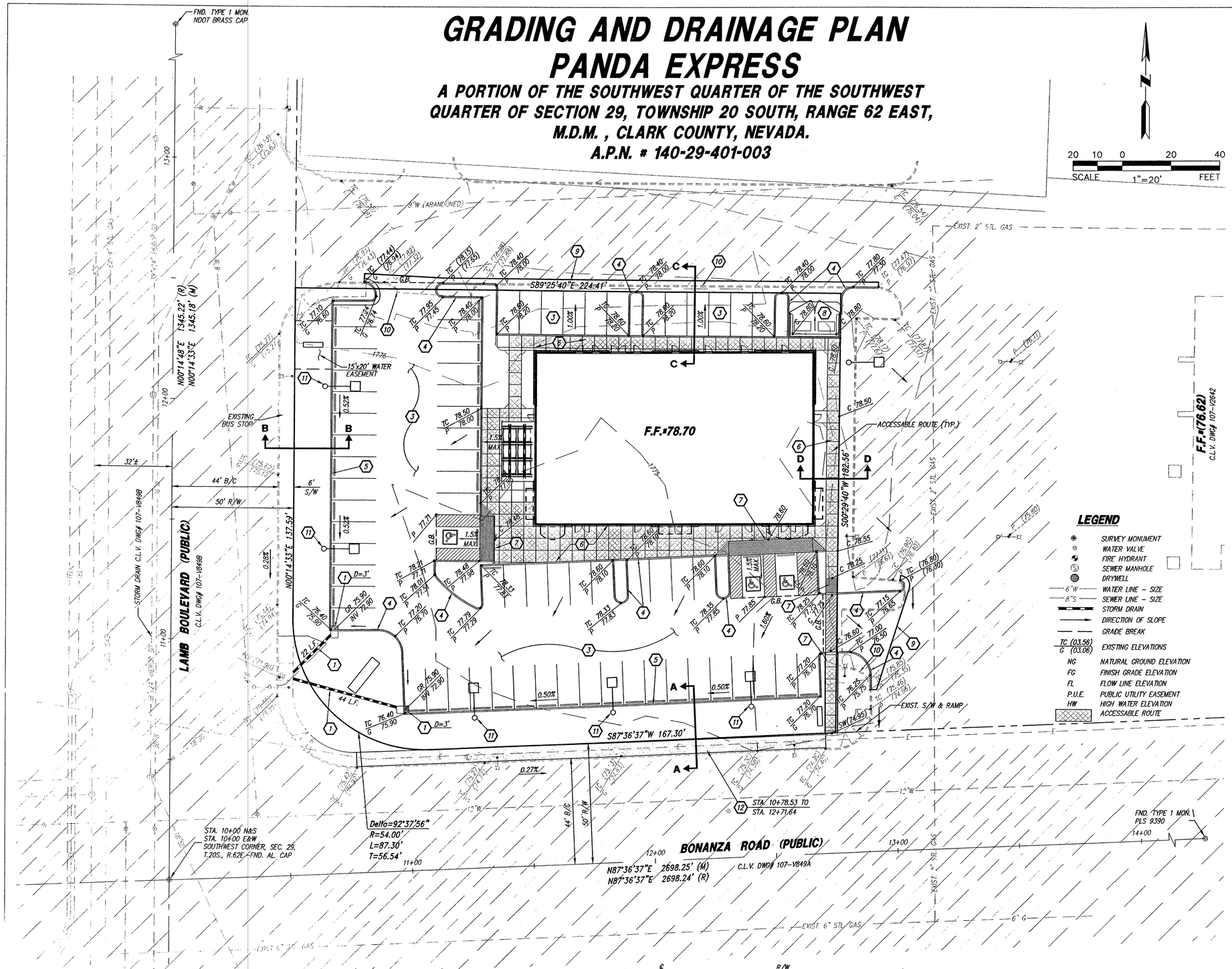

LEGEND

- SURVEY MONUMENT
- WATER VALVE
- FIRE HYDRANT
- SEWER MANHOLE
- DRYWELL
- 6"W — WATER LINE – SIZE
- 8"S — SEWER LINE – SIZE
- STORM DRAIN
- DIRECTION OF SLOPE
- GRADE BREAK
- TC (03.56) / G (03.06) — EXISTING ELEVATIONS
- NG — NATURAL GROUND ELEVATION
- FG — FINISH GRADE ELEVATION
- FL — FLOW LINE ELEVATION
- P.U.E. — PUBLIC UTILITY EASEMENT
- HW — HIGH WATER ELEVATION
- ACCESSABLE ROUTE

GRADING CONSTRUCTION NOTES

1. INSTALL JENSEN PRECAST #2436-4R CURB INLET WITH NEENAH R-3246 CURB INLET FRAME, GRATE & CURB BOX WITH TYPE "A" GRATE, OR APPROVED EQUAL. CONNECT 12" PVC SDR 35 DRAIN PIPE TO EXISTING STORM DRAIN. MATCH PROPOSED STORM DRAIN'S **INVERT OF PIPE TO INVERT OF EXISTING CATCH BASIN.**
2. NOT USED.
3. CONSTRUCT 2" A.C. OVER 6" A.B.C. PAVEMENT.
4. CONSTRUCT 6" VERT. CURB PER CLARK COUNTY STD. DWG. 219, TYPE "A".
5. CONSTRUCT 6" VERT. CURB & GUTTER PER CLARK COUNTY STD. DWG. 216.
6. CONSTRUCT CONCRETE SIDEWALK PER CLARK COUNTY STD. DWG. 234, WITH TURNDOWN PER DETAIL THIS SHEET.
7. CONSTRUCT CONCRETE SIDEWALK RAMP. SEE ARCHITECTURAL PLANS FOR DETAILS AND SPECIFICATIONS. INSTALL HANDRAIL AS SHOWN PER ADA REQUIREMENTS.
8. TRASH ENCLOSURE. SEE ARCHITECTURAL PLANS FOR DETAILS AND SPECIFICATIONS.
9. MATCH EXISTING PAVEMENT. CONTRACTOR TO ADJUST SAWCUT AND PAVEMENT MATCH LINE FOR ACTUAL FIELD CONDITIONS.
10. REMOVE AND DISPOSE OF EXISTING CURB AND GUTTER.
11. PROPOSED LIGHTING (BY OTHERS).
12. CONSTRUCT 6' CONCRETE SIDEWALK PER CLARK COUNTY STD. DWG. 234.

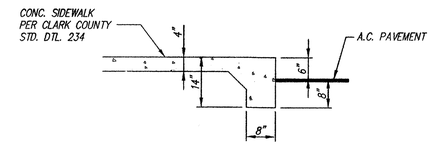

SIDEWALK TURNDOWN

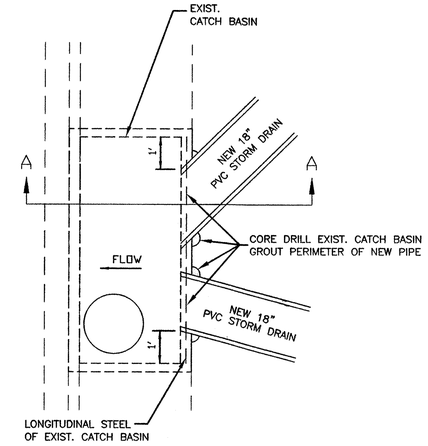

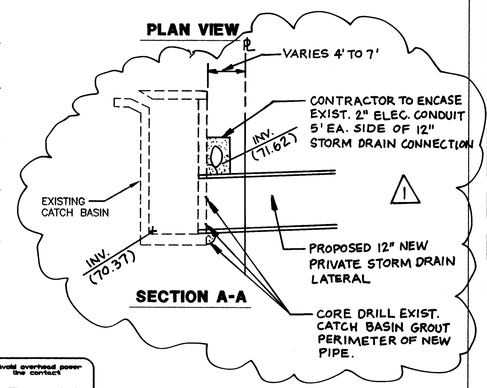

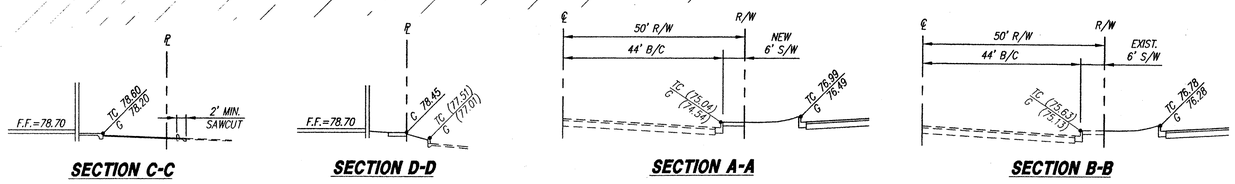

Call before you Dig. 1-800-227-2600

Call before you Overhead 1-702-593-6111

LANDMARK ENGINEERING INC
7310 North 16th Street
Phoenix, Arizona 85020
Suite 285
602.861.2005

JERE W. PLANCK
Architect
4041 N. CENTRAL AVENUE, SUITE C-100
PHOENIX, ARIZONA 85012
(602) 222-4056
FAX (602) 279-4086

PANDA RESTAURANT GROUP
SHOPS BUILDING
N.E.C. of LAMB BLVD. AND BONANZA ROAD
LAS VEGAS, NEVADA

JOB NO: 03116
PROJECT MGR: BEK
DRAWN BY: RH
CHECKED BY: J. LEMON

NO.	REVISION	DATE
1	REVISED STORM DRAIN	11/23/04

THESE DRAWINGS ARE "NOT FOR CONSTRUCTION" UNTIL ALL ITEMS ARE INITIALED AND DATED

	INITIAL	DATE
SUBMITTED TO CITY		
ISSUED FOR BIDDING: FINAL COORDINATION & APPROVAL HAS NOT BEEN COMPLETED		
CITY APPROVAL		
ISSUED FOR CONST. O.C. SHALL REVISE BID TO OWNER WITHIN 3 WORKING DAYS OR O.C. ASSUMES ALL CHANGES		

SHEET TITLE: GRADING & DRAINAGE PLAN PANDA EXPRESS

FILE LOCATION: 3116gr02

PLOT DATE: 06-07-04

PROFESSIONAL ENGINEER - STATE OF NEVADA
JAMES D. LEMON
Exp. 12/31/05
CIVIL
No. 5985

C-2

SHEET 2 OF 4

107V4078