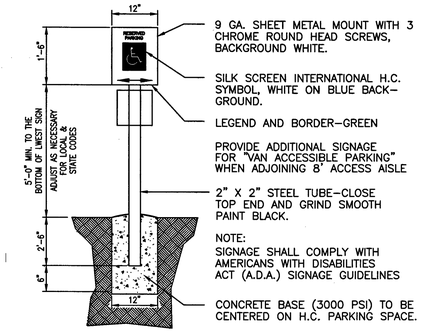


## 9 EXTERIOR ACCESSIBLE SIGN

NOT TO SCALE

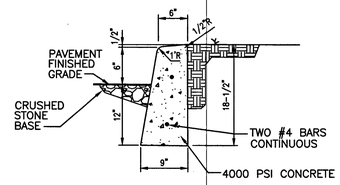


## 6 CONCRETE POST CURB

NOT TO SCALE

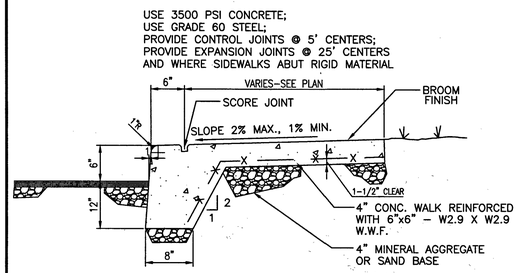


## 3 SIDEWALK WITH TURN DOWN CURB

NOT TO SCALE

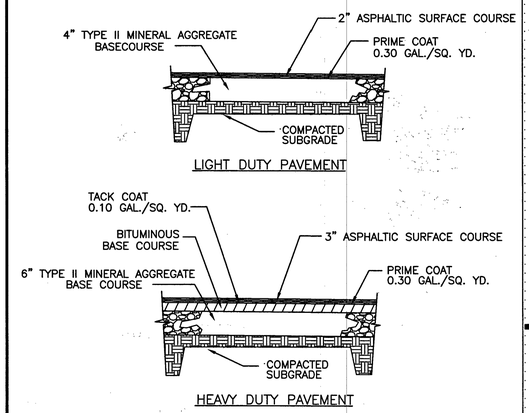


## 1 PAVEMENT SECTION

NOT TO SCALE

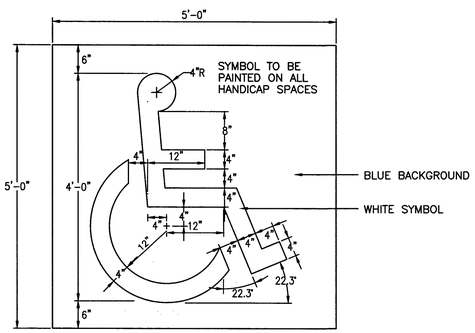


## 10 PAINTED ACCESSIBLE SYMBOL

NOT TO SCALE

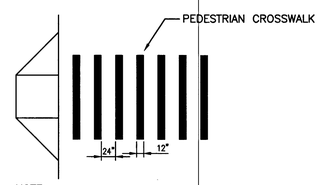


NOTE:

1. PEDESTRIAN CROSSWALK SHALL BE IN COMPLIANCE WITH ADAAG 4.7.10
2. PEDESTRIAN CROSSWALK, SOLID WHITE MARKINGS PAINTED ON ASPHALT (TYPICAL).
3. PAINT 12" WIDE STRIPES AS INDICATED. USE PORTER TRAFFIC WHITE PAINT OR APPROVED EQUAL.

## 7 PEDESTRIAN CROSSWALK

NOT TO SCALE

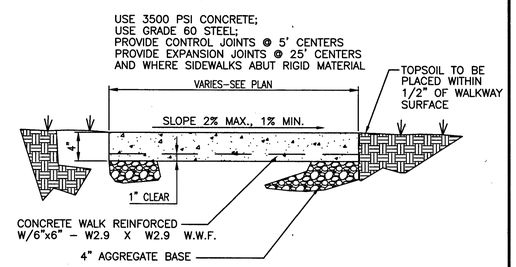


## 4 CONCRETE SIDEWALK

NOT TO SCALE

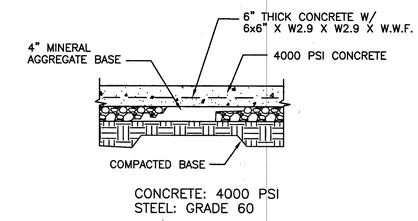


## 2 CONCRETE PAVEMENT

NOT TO SCALE

NOTES:

1. PROVIDE 3'-0" HEIGHT 1-1/2" O.D. HANDRAIL ON BOTH SIDES OF RAMP WITH 1'-0" MIN. HANDRAIL EXTENSIONS PAST TOP AND BOTTOM OF RAMP.
2. VARIATIONS IN HANDRAIL HEIGHT SHALL NOT BE ALLOWED.
3. RAMP SHALL HAVE A MINIMUM WIDTH OF 5'-0".
4. HANDRAIL SHALL BE SMOOTH FINISH, ALL WELDED SURFACES PAINTED WITH TWO COATS OF ENAMEL, COLOR TO BE SELECTED BY ARCHITECT.
5. PROVIDE HANDRAIL/GUARDRAIL AT ALL RETAINING WALLS GREATER THAN 30" IN HEIGHT.

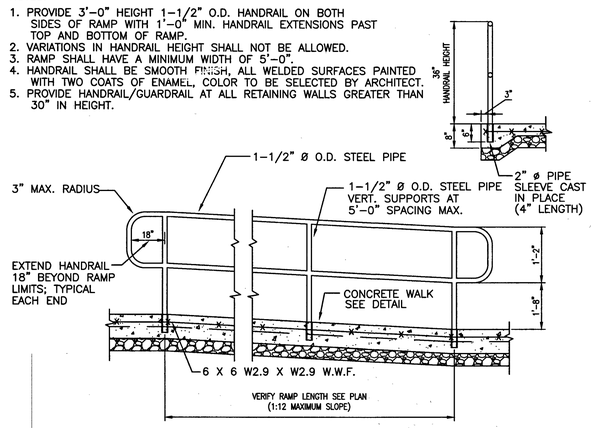


## 11 RAMP WITH HANDRAIL

NOT TO SCALE

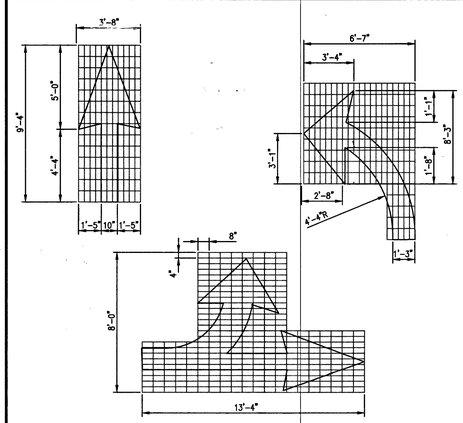


## 8 ROADWAY DIRECTIONAL ARROWS

NOT TO SCALE

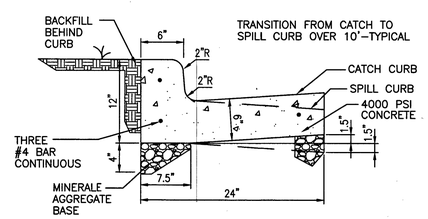


## 5 CONCRETE CURB & GUTTER

NOT TO SCALE


Littlejohn
An S&ME Company
1615 Edgewater Drive, Suite 200, ORLANDO, FLORIDA 32804
T 407.975.1273 F 407.975.1278 www.leainc.com



HEREFORD · DOOLEY
ARCHITECTS
1720 WEST END AVE · SUITE 300
NASHVILLE · TENNESSEE · 37203
P · 615 · 244 · 7399
F · 615 · 244 · 6697
WWW.HDARCHITECTS.COM


PROJECT 215004.00

LOCATION 3050 North Tenaya Way
Las Vegas, NV 89128

CLIENT HCA
One Park Plaza Bldg II-E, 3rd Floor
Nashville, TN 37203

MountainView Hospital Medical Office Building

CONSTRUCTION DOCUMENTS

PROFESSIONAL ENGINEER-STATE OF NEVADA
JAMES H. LITTLEJOHN
exp 12/31/17
CIVIL
No. 13639
7/20/15

DATES OF ISSUANCE
07/10/15
3 11-25-15

TITLE H#62048 SITE DETAILS 60726583

SHEET C8.0


G:\Projects\2015\20150277\dwg\Construction\20150277_C8.0_DET.dwg-C8.0 - Site Details Dec 21, 2015 - 4:46pm ggeorge
THIS DRAWING IS THE PROPERTY OF HEREFORD DOOLEY ARCHITECTS. IT IS NOT TO BE REPRODUCED IN WHOLE OR IN PART. IT IS NOT TO BE USED ON ANY OTHER PROJECT. IT SHALL BE RETURNED UPON REQUEST. COPYRIGHT AS DATED HEREFORD DOOLEY ARCHITECTS. NOT VALID UNLESS SIGNED AND SEALED.