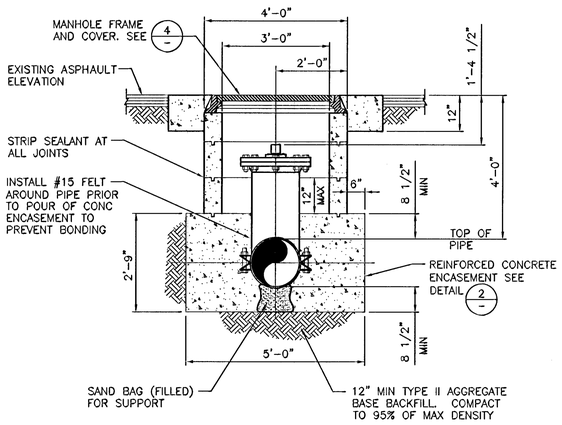

INSTA-VALVE ISTALLATION

SCALE: 1/2" = 1'-0"

1 / CD1

C1, C3

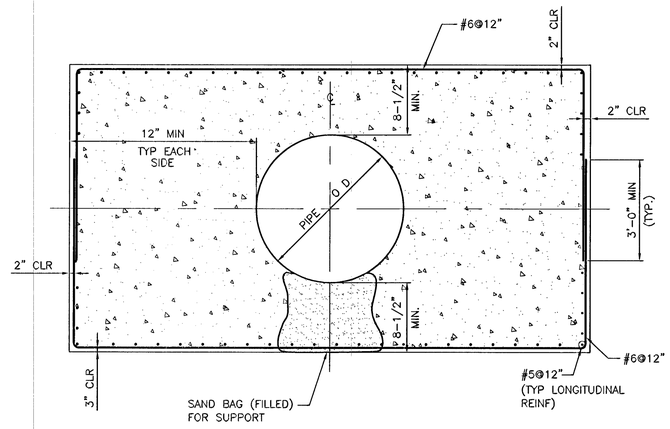

REINFORCED CONCRETE ENCASEMENT

NOT TO SCALE

2 / -

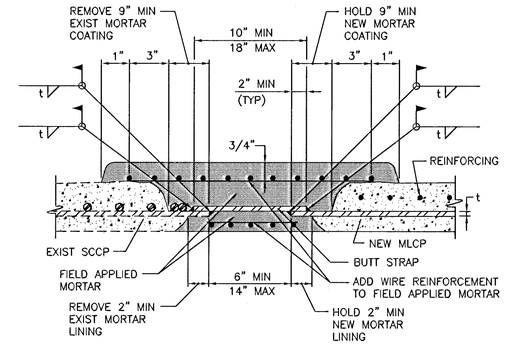

NOTES:

1. SEE SPECS SEC 02511 FOR MORTAR LINED AND COATED STEEL PIPE.
2. BEFORE ANY CUT IS MADE TO THE EXISTING SCCP, TACK WELD THE EXISTING SPIRAL ROD WRAP OUTSIDE OF THE CUT AREA TO MAINTAIN TENSION, THEN CUT THE ROD WRAP AT APPROXIMATELY THE CENTER OF THE AREA TO BE REMOVED AND USING THE EXCESS ROD WRAP, TENSION 1-1/2 FULL OF THE ROD WRAP SNUGLY AROUND AND WELD TO THE CYLINDER PARALLEL TO WHERE THE CUT IN THE EXISTING SCCP IS TO BE MADE.

BUTT STRAP JOINT AT MLCP CONNECTIONS TO EXISTING SCCP

NOT TO SCALE

3 / CD1

C1, C3, C4

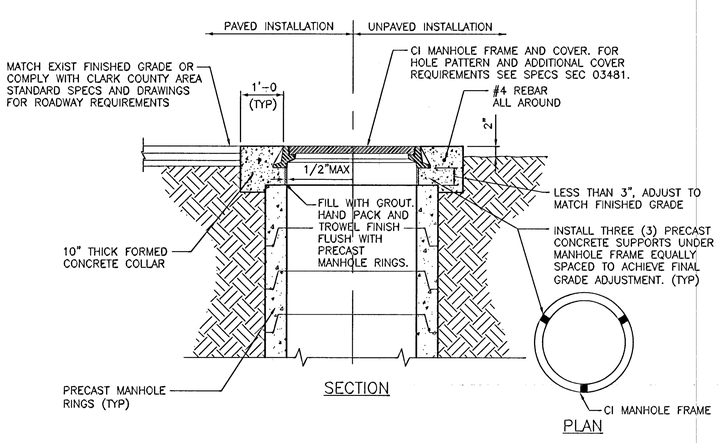

MANHOLE COVER AND COLLAR INSTALLATION

NOT TO SCALE

4 / -

Avoid overhead power line contact. It's costly.
Call before you OVERHEAD
1-702-227-2929

Call before you Dig
Avoid cutting underground utility lines. It's costly.
Call 811

CLV DWG # H# 57736 SHEET 565-993

REVISIONS:

LAS VEGAS VALLEY WATER DISTRICT
1001 S. VALLEY VIEW BOULEVARD
LAS VEGAS, NEVADA 89153
(702) 870-2011

VERIFY SCALE
1/2 0 1/2 1
BAR REPRESENTS ONE INCH WHEN ORIGINAL
SCALE AS SHOWN

MISCELLANEOUS VAULT REHABILITATION, FY 2014/2015

STANDARD DETAILS I

DRAWN BY: CHRISTOPHER BLANK	3/11/2014	
CHECKED BY: RYAN CADE PEARSON	3/12/2014	
RECOMMENDED BY: RYAN CADE PEARSON	DATE	
ACCEPTED BY: PETER J. JAUCH	DATE	

PROFESSIONAL ENGINEER STATE OF NEVADA
RYAN CADE PEARSON
Expr. 12/31/15
CIVIL
No. 14463
3/17/15

CONTRACT NUMBER
C1408

DRAWING NUMBER CD1
SHEET 10 OF 13