"Asbuilts"

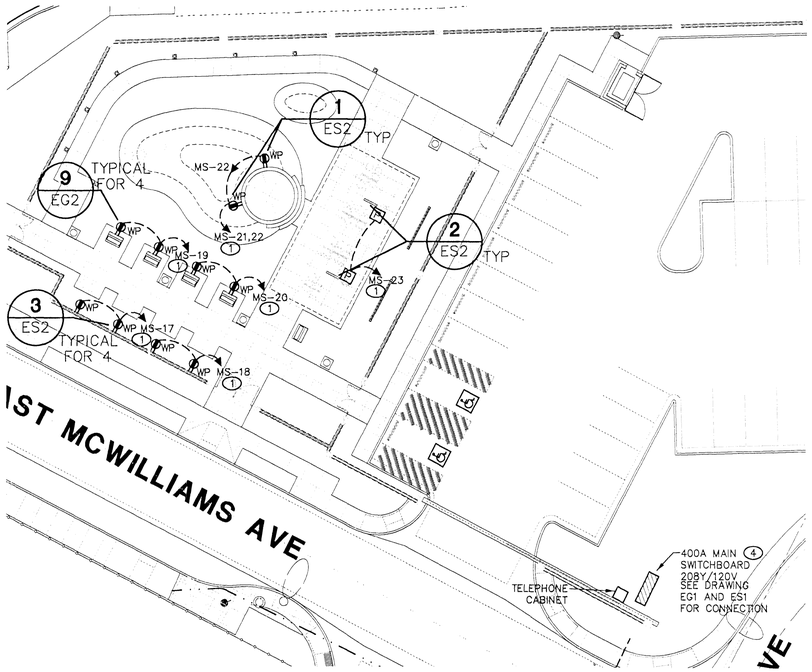

ELECTRICAL SITE PLAN

SCALE: 1"=20'-0"

NOTES:

1. SEE DRAWING EG1 ONELINE FOR FEEDER AND CONDUIT SIZES.
2. SEE ARCHITECT DRAWING FOR EXACT PULLBOX LOCATIONS AROUND AMPHITHEATER AREA.

GENERAL NOTES:

1. ALL PULL BOXES TO BE # 3 1/2 UNLESS NOTED OTHERWISE
2. WHEN SAW CUTTING/TRENCHING FOLLOW LOCAL AND COUNTY ORDINANCES. REPAIR AND PATCH, MATCH SURROUNDING AREAS TO OWNERS FINAL APPROVAL.
3. ALL UTILITY WORK IS INCLUDED AS PART OF THIS PROJECT. REFER TO THE UTILITY DRAWINGS FOR INSTALLATION REQUIREMENTS.
   NV ENERGY – PROJECT ID 187387
   EMBARQ – WA # 24200835
   COX COMMUNICATIONS – PERMIT # 6258-05
4. SEE ONELINE FOR FEEDER AND CONDUIT SIZES UNLESS NOTED ON DRAWING PLAN.

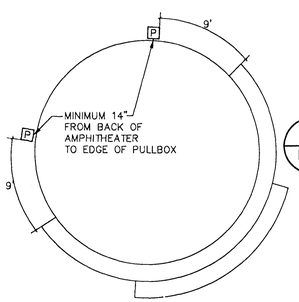

5 ES2 PULLBOX DETAIL LAYOUT AT AMPHITHEATER

NOT TO SCALE

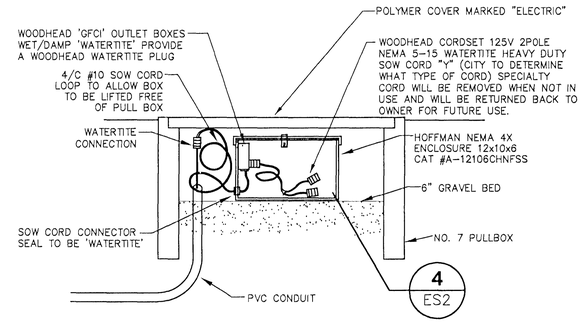

1 ES2 GROUND RECEPTACLE DETAIL

NOT TO SCALE

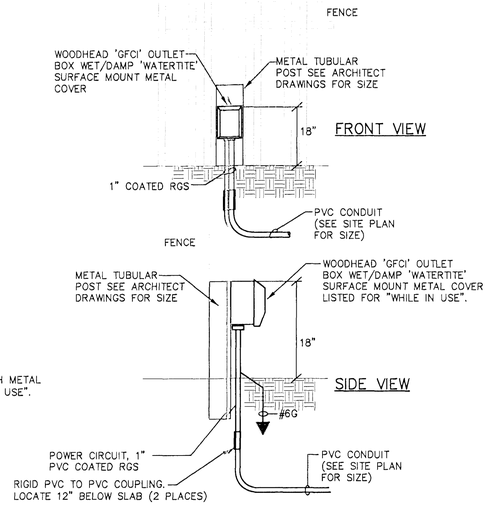

DUPLEX GFI RECEPTACLE WITH METAL COVER LISTED FOR "WHILE IN USE".

3 ES2 POST RECEPTACLE AT WALL

NOT TO SCALE

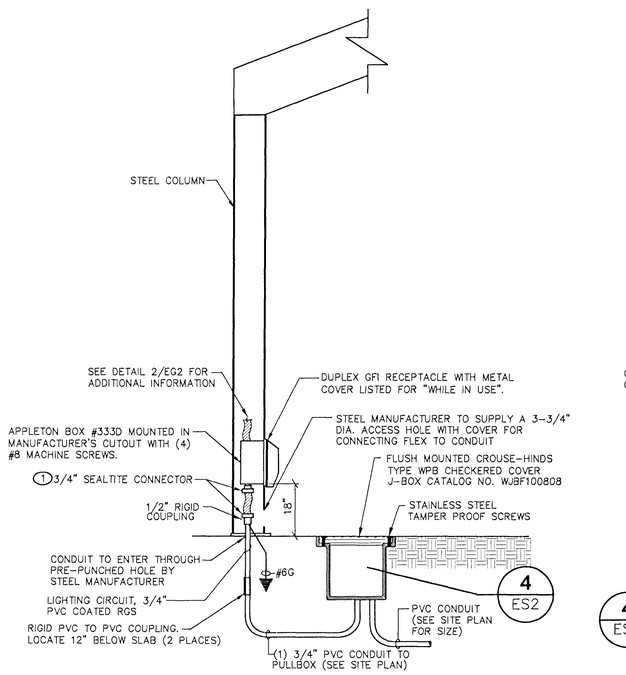

2 ES2 RAMADA SHELTER-CONDUIT MOUNTING DETAIL

NOT TO SCALE

NOTES: THIS DETAIL ONLY

1. CONDUIT TO BE ROUTED INSIDE COLUMN. COORDINATE CONDUIT INSTALLATION WITH SHELTER CONSTRUCTION. CONDUIT TO BE ATTACHED TO COLUMN.

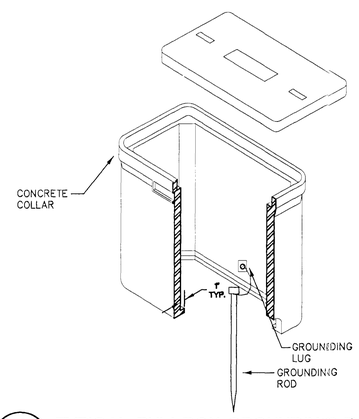

4 ES2 TYPICAL PULLBOX GROUNDING DETAIL

NOT TO SCALE

NOTES: (THIS DETAIL)

1. PROVIDE FACTORY IMPRINTED "LIGHTING" OR "ELECTRIC".
2. EXTEND ALL CONDUITS A MINIMUM OF 3" ABOVE BOTTOM OF BOX, ALL WIRES A MINIMUM OF 24" OUTSIDE OF BOX.
3. LID SHALL BE APPROVED NON-METALIC POLYMER TYPE MATERIAL (NO CONCRETE, NO METAL, NO FIBERLITE, NO OTHER MATERIALS – NO SUBSTITUTIONS) WITH BRASS TIE DOWNS.
4. SEE SPECIFICATION FOR ADDITIONAL INFORMATION ON APPROVED SPLICES AND PULLBOX INSTALLATION AND GROUNDING REQUIREMENTS.

Avoid cutting underground utility lines. It's costly.

Call before you Dig
11-800-227-2600

PLANS APPROVED
ELECTRICAL
Building & Safety Dept.
City of Las Vegas, Nevada
DATE AUG 05 2010
Does Not Include Structural, Architectural, Plumbing/Mechanical or Off-Site Improvements Make No Change Without Approval Plan Is Found To Violate Any Ordinance

ENTIRE DRAWING

CONSTRUCTION SET

tjk consulting engineers, inc.
5459 S. Durango Dr., Suite10
Las Vegas, NV 89113
P: 702.871.3621
F: 702.871.8353
www.tjkengineers.com

REVISIONS:		
NO.	DATE:	DESCRIPTION
1	08/25/09	BOLLARD POLE BASE
2	07/21/10	RECEPTACLES ADDITION

DEPARTMENT OF PUBLIC WORKS
400 EAST STEWART
LAS VEGAS, NEVADA 89101
(702) 229-6276

poggemeyer design group, inc.
engineers • planners • surveyors
2601 North Tenaya Way • Las Vegas, NV 89128 • p) 702.255.9100 • f) 702.255.9375

TITLE: Neon Boneyard Park
City of Las Vegas

SHEET: ELECTRICAL SITE PLAN

DRAWN BY:	DESIGNED BY:	CHECKED BY:	SCALE:
PM	PM	TA	HORIZ VERT
04-23-09	04-23-09	04-23-09	

PROJECT NO: TJK# 06076

PROFESSIONAL ENGINEER-STATE OF NEVADA
THOMAS M. ANDERSON
Exp: 12-31-10
ELECTRICAL
No. 13946

Sheet
ES2
38 of 38

DRAWING NO.
676-12