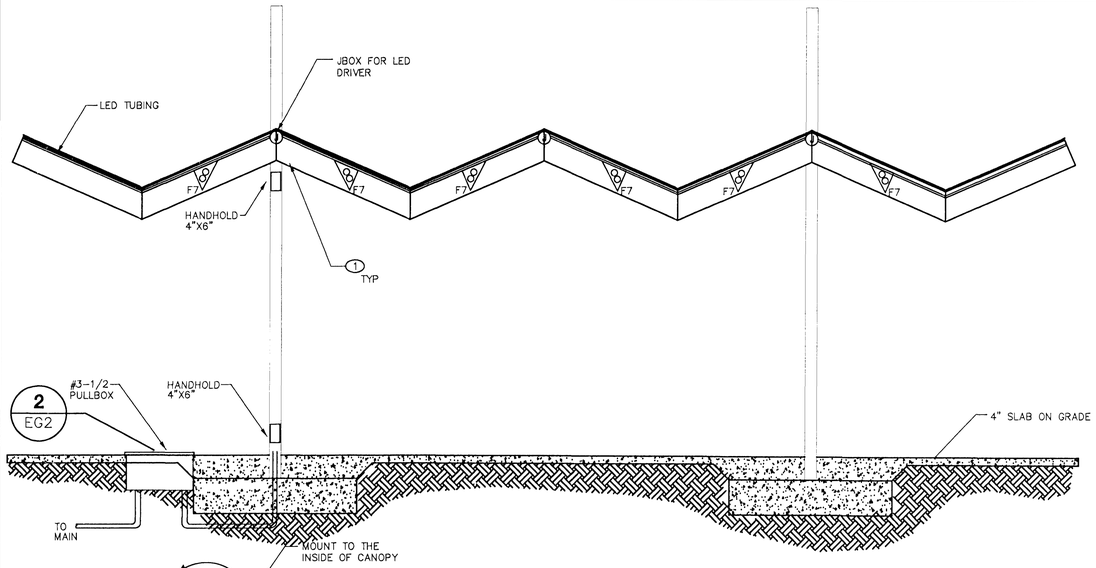

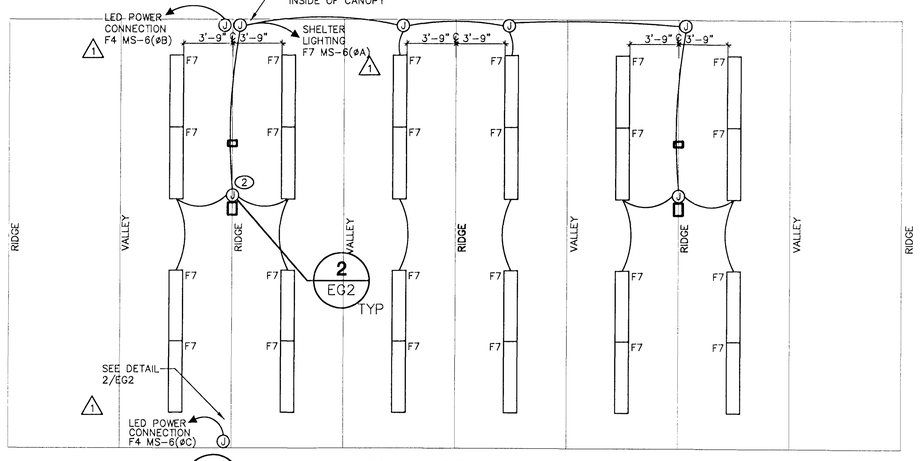

1 EG2 SHADE STRUCTURE AREA

NOT TO SCALE

NOTES:

1. REFER TO STRUCTURAL DRAWINGS S2, S3 AND S4 FOR PROPER STRUCTURAL INFORMATION. PRIOR TO ORDERING F7 FIXTURES CONTRACTOR SHALL VERIFY WITH ENGINEER THAT FIXTURES PROVIDED ON LIGHTING FIXTURE SCHEDULE CAN BE MOUNTED PROPERLY AS SHOWN.
2. PROVIDE 3#8,3/4"CONDUIT THROUGHOUT SHELTER FROM PULLBOX

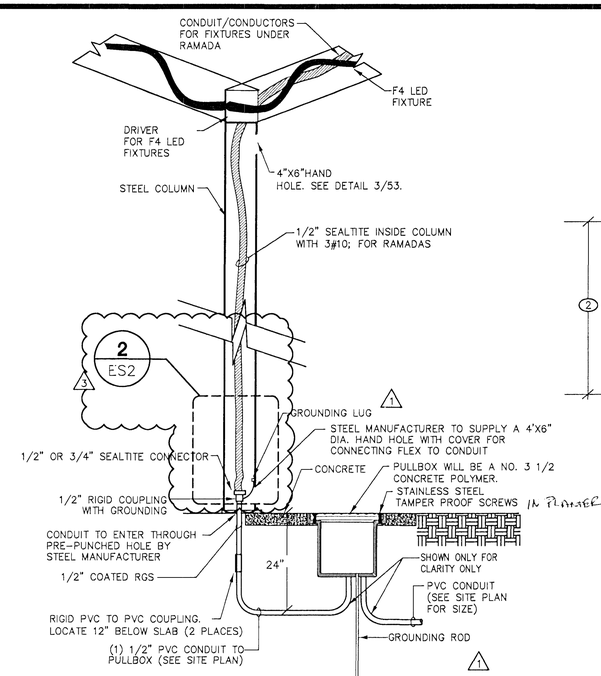

2 EG2 SHADE STRUCTURE-CONDUIT MOUNTING DETAIL

NOT TO SCALE

NOTES: THIS DETAIL ONLY

1. CONDUIT TO BE ROUTED INSIDE COLUMN. COORDINATE CONDUIT INSTALLATION WITH SHELTER CONSTRUCTION. CONDUIT TO BE ATTACHED TO COLUMN.

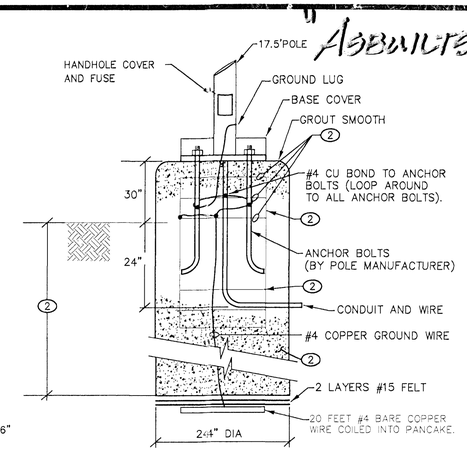

3 EG2 POLEBASE DETAIL - PARKING LOT

NOT TO SCALE

NOTE:

1. POUR ENTIRE BASE IN ONE POUR TO BASE PLATE AND SLOPE TOP AWAY FROM POLE. STRIP SONOTUBE FORMS OFF WHILE CONCRETE IS STILL GREEN (APPROXIMATELY FOUR HOURS AFTER POUR) AND STONE RUB TO PROVIDE A SMOOTH, SEAMLESS SURFACE APPEARANCE, AND THEN A LIGHT BROOM FINISH. WET CURE BASE FOR SEVEN DAYS.
2. REFER TO THE STRUCTURAL DRAWINGS FOR STRUCTURAL REQUIREMENTS.

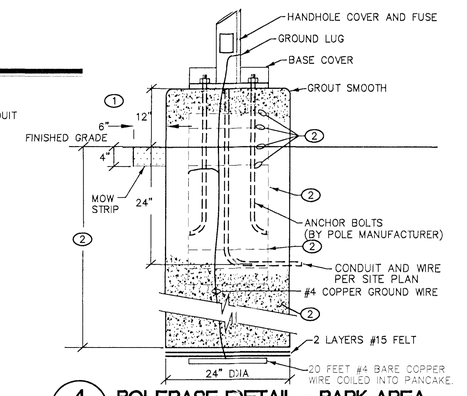

4 EG2 POLEBASE DETAIL - PARK AREA

NOT TO SCALE

NOTE:

1. POUR ENTIRE BASE IN ONE POUR TO BASE PLATE AND SLOPE TOP AWAY FROM POLE. STRIP SONOTUBE FORMS OFF WHILE CONCRETE IS STILL GREEN (APPROXIMATELY FOUR HOURS AFTER POUR) AND STONE RUB TO PROVIDE A SMOOTH, SEAMLESS SURFACE APPEARANCE, AND THEN A LIGHT BROOM FINISH. WET CURE BASE FOR SEVEN DAYS.
2. REFER TO THE STRUCTURAL DRAWINGS FOR STRUCTURAL REQUIREMENTS.

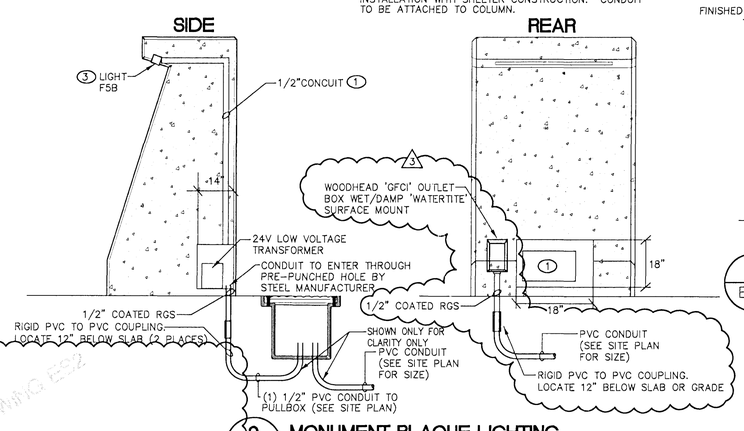

9 EG2 MONUMENT PLAQUE LIGHTING

NOT TO SCALE

NOTES:

1. COORDINATE WITH LIGHTING MANUFACTURER ON THE SIZE OF MAINTENANCE BOX FOR PROPER VENTILATION AND SIZE. USE VANDEL PROOF SCREWS
2. CORDINATE WITH CONCRETE MANUFACTURE TO PLACE CONDUIT WITHIN THE CONCRETE WHEN POURING. SEE ARCHITECT FOR DETAILS AND SPECIFICATIONS.
3. LIGHTING TO BE RECESSED MOUNTED IN MONMUMENT VANDEL PROOF SCREWS TO BE USED. TYPICAL OF (4).

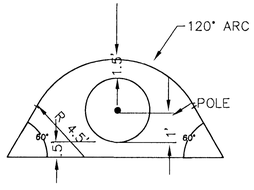

7 EG2 POLEBASE COLLAR DETAIL

NOT TO SCALE

SEE REVISED DETAIL ON DRAWING ES2

8 EG2 GROUND RECEPTACLE DETAIL FOR AMPITHEATER

NOT TO SCALE

PLANS APPROVED ELECTRICAL Building & Safety City of Las Vegas, Nevada MAY AUG 05 2010

CONSTRUCTION SET

tjk consulting engineers, inc.
5459 S. Durango Dr., Suite10
Las Vegas, NV 89113
P: 702.871.3621
F: 702.871.8353
www.tjkengineers.com

REVISIONS			
NO.	DATE		DESCRIPTION
1	07/07/09	BUILDING DEPT. COMMENTS	
2	07/21/10	RECEPTACLE ADDITION	

DEPARTMENT OF PUBLIC WORKS
400 EAST STEWART
LAS VEGAS, NEVADA 89101
(702) 229-6276

poggemeyer design group, inc.
engineers • planners • surveyors • landscape architects
2960 North Tenaya Way • Las Vegas, NV 89128 • p) 702.255.9400 • f) 702.255.9375

TITLE: Neon Boneyard Park
City of Las Vegas

SHEET: ELECTRICAL DETAILS

DRAWN BY:	DESIGNED BY:	CHECKED BY:	PROJECT NO:
PM	PM	TA	TJK# GRD078
04-23-09	04-23-09	04-23-09	SCALE: HORIZ VERT

PROFESSIONAL ENGINEER STATE OF NEVADA THOMAS M. ANDERSON Exp. 12-31-10 ELECTRICAL No. 13946

Sheet EG2
36 of 38
DRAWING NO. 676-12

3x6