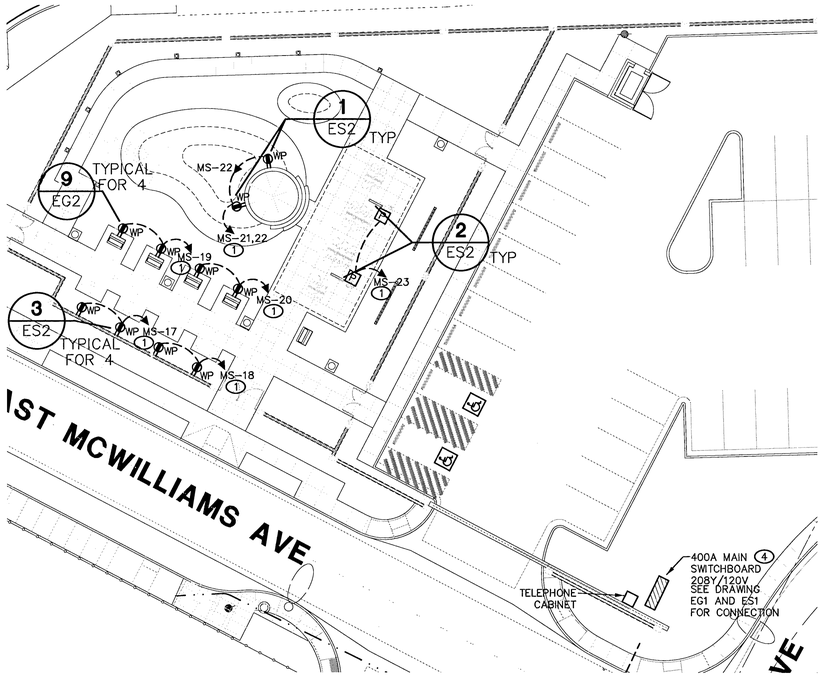

ELECTRICAL SITE PLAN

SCALE: 1"=20'-0"

NOTES:

1. SEE DRAWING EG1 ONELINE FOR FEEDER AND CONDUIT SIZES.
2. SEE ARCHITECT DRAWING FOR EXACT PULLBOX LOCATIONS AROUND AMPHITHEATER AREA.

GENERAL NOTES:

1. ALL PULL BOXES TO BE # 3 1/2 UNLESS NOTED OTHERWISE
2. WHEN SAW CUTTING/TRENCHING FOLLOW LOCAL AND COUNTY ORDINANCES. REPAIR AND PATCH, MATCH SURROUNDING AREAS TO OWNERS FINAL APPROVAL.
3. ALL UTILITY WORK IS INCLUDED AS PART OF THIS PROJECT. REFER TO THE UTILITY DRAWINGS FOR INSTALLATION REQUIREMENTS. NV ENERGY – PROJECT ID 187387 EMBARQ – WA # 24200835 COX COMMUNICATIONS – PERMIT # 6258-05
4. SEE ONELINE FOR FEEDER AND CONDUIT SIZES UNLESS NOTED ON DRAWING PLAN.

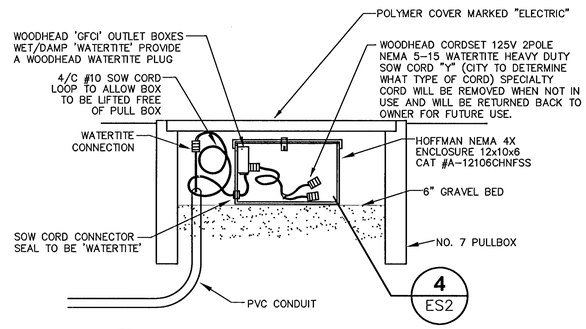

1 ES2 **GROUND RECEPTACLE DETAIL**

NOT TO SCALE

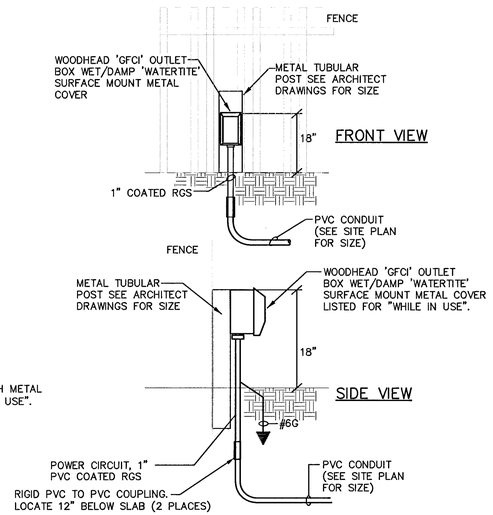

DUPLEX GFI RECEPTACLE WITH METAL COVER LISTED FOR "WHILE IN USE".

3 ES2 **POST RECEPTACLE AT WALL**

NOT TO SCALE

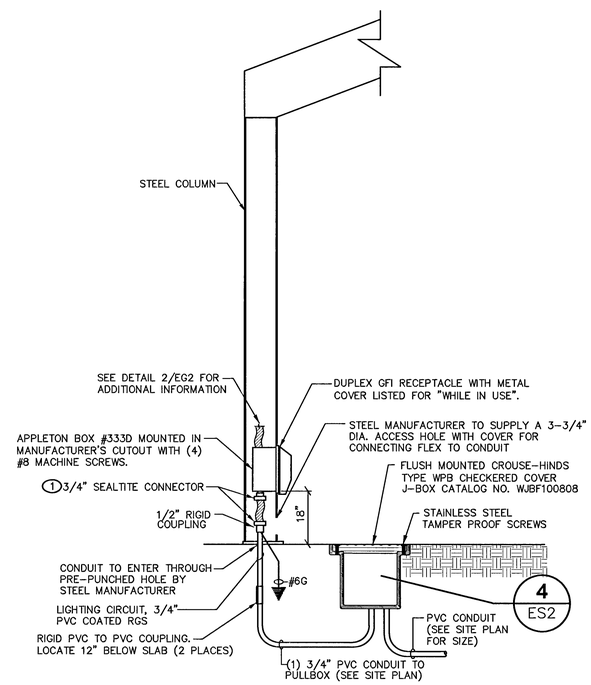

2 ES2 **RAMADA SHELTER-CONDUIT MOUNTING DETAIL**

NOT TO SCALE

NOTES: THIS DETAIL ONLY

1. CONDUIT TO BE ROUTED INSIDE COLUMN. COORDINATE CONDUIT INSTALLATION WITH SHELTER CONSTRUCTION. CONDUIT TO BE ATTACHED TO COLUMN.

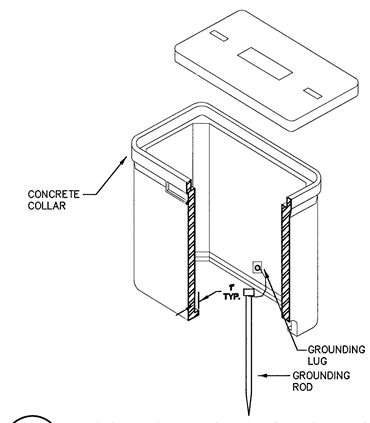

4 ES2 **TYPICAL PULLBOX GROUNDING DETAIL**

NOT TO SCALE

NOTES: (THIS DETAIL)

1. PROVIDE FACTORY IMPRINTED "LIGHTING" OR "ELECTRIC".
2. EXTEND ALL CONDUITS A MINIMUM OF 3" ABOVE BOTTOM OF BOX, ALL WIRES A MINIMUM OF 24" OUTSIDE OF BOX.
3. LID SHALL BE APPROVED NON-METALIC POLYMER TYPE MATERIAL (NO CONCRETE, NO METAL, NO FIBERLITE, NO OTHER MATERIALS – NO SUBSTITUTIONS) WITH BRASS TIE DOWNS.
4. SEE SPECIFICATION FOR ADDITIONAL INFORMATION ON APPROVED SPLICES AND PULLBOX INSTALLATION AND GROUNDING REQUIREMENTS.

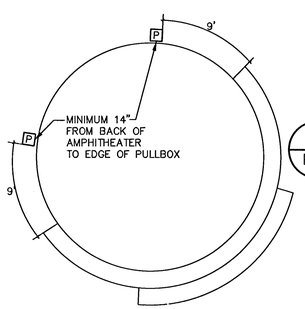

5 ES2 **PULLBOX DETAIL LAYOUT AT AMPHITHEATER**

NOT TO SCALE

126026

PLANS APPROVED ELECTRICAL
Building & Safety Dept.
City of Las Vegas, Nevada
DATE AUG 05 2010
This Not Includes Structural, Architectural, Plumbing/Mechanical or Off-Site Improvements Make No Change Of Approved Plans Or Violate Any Ordinance

△2 ENTIRE DRAWING

CONSTRUCTION SET

tjk consulting engineers, inc.
5459 S. Durango Dr., Suite10
Las Vegas, NV 89113
P: 702.871.3621
F: 702.871.8353
www.tjkengineers.com

Call before you Dig
1-800-227-2600

REVISIONS:

NO.	DATE:	DESCRIPTION
2	08/25/09	BOLLARD POLE BASE
1	07/21/10	RECEPTACLES ADDITION

DEPARTMENT OF PUBLIC WORKS
400 EAST STEWART
LAS VEGAS, NEVADA 89101
(702) 229-6276

poggemeyer design group, inc.
engineers • planners • surveyors • landscape architects
2501 North Tenaya Way • Las Vegas, NV 89128 • p) 702.255.8100 • f) 702.255.8375

TITLE: Neon Boneyard Park City of Las Vegas

SHEET: ELECTRICAL SITE PLAN

DRAWN BY:	DESIGNED BY:	CHECKED BY:	SCALE:
PM	PM	TA	HORIZ VERT
04-23-09	04-23-09	04-23-09	

PROJECT NO: TJK# 06078

PROFESSIONAL ENGINEER STATE OF NEVADA THOMAS M. ANDERSON Exp: 12-31-10 ELECTRICAL No. 13946

Sheet ES2 38 of 38

DRAWING NO. 676-12