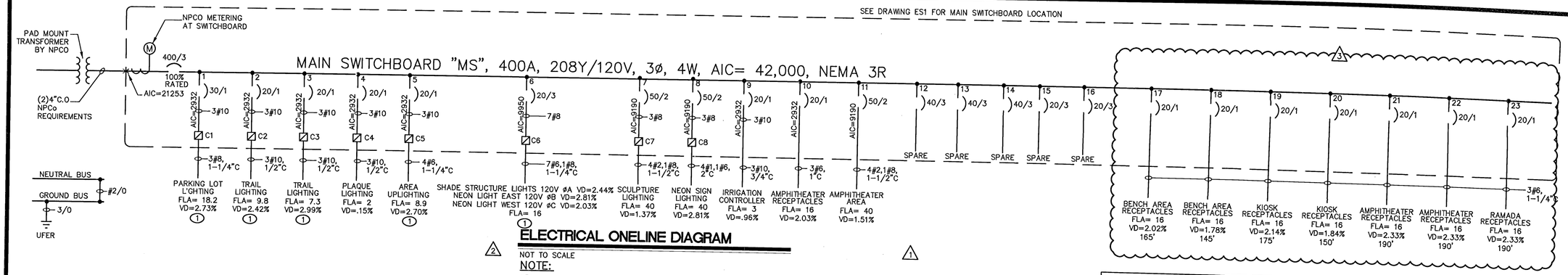

ELECTRICAL ONELINE DIAGRAM

NOT TO SCALE

NOTE:

1. SEE DETAIL 2/EG1 FOR GROUNDING REQUIREMENTS

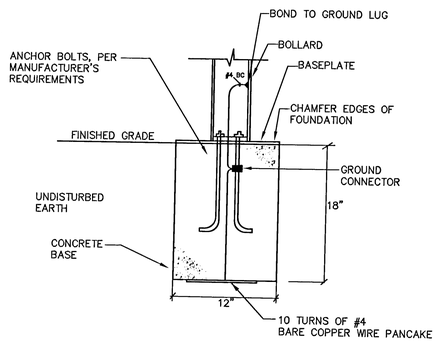

1 EG1 BOLLARD BASE DETAIL - F3 - ELEVATION

NOT TO SCALE

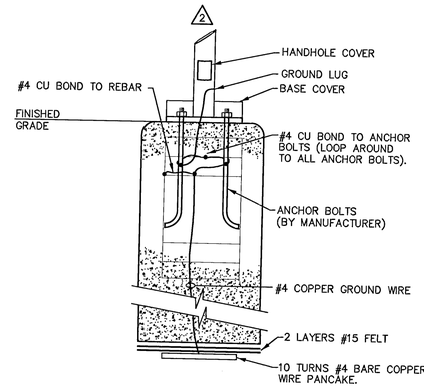

2 EG1 FOUNDATION GROUNDING DETAIL- F1/B, AND F2 ILLUMINATED SHADE STRUCTURE

NOT TO SCALE

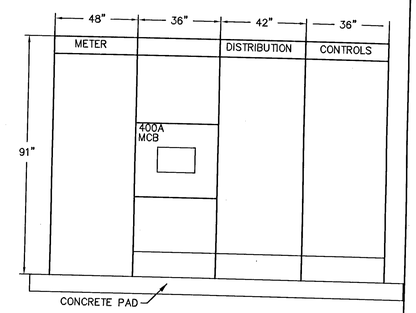

MAIN SWITCHBOARD 'MS' ELEVATION

NOT TO SCALE

NOTE:

1. SWITCHBOARD SHOWN WITHOUT NEMA 3R DOORS FOR CLARITY.
2. SEE ONELINE DIAGRAM FOR CONDUIT AND FEEDER REQUIREMENTS.
3. CONDUIT TO CONTACTORS WILL NOT BE NEEDED IF CONTROL CABINET IS WITHIN THE MAIN SWITCHBOARD. CONDUIT WILL BE NEEDED IF ROUTED OUTSIDE EITHER ABOVE OR BELOW GROUND.

ELECTRICAL LEGEND:

- SWITCHBOARD
- TRANSFORMER
- PULLBOX
- MOTOR STARTER
- COMBINATION MOTOR STARTER
- CONTACTOR
- TTC — TELEPHONE TERMINAL CABINET
- IN-GROUND FIXTURE
- IN-GROUND FIXTURE
- POLE MOUNTED HID AREA LIGHT LETTER DENOTES TYPE
- FLOOR MOUNTED DUPLEX RECEPTACLE
- WP — GFI RECEPTACLE – WEATHER PROOF
- 2 — ELECTRIC SHEET NOTE DESIGNATION
- 2 — SPECIAL PURPOSE RECEPTACLE – NUMBER REFERS TO RECEPTACLE SCHEDULE
- CONTROL STATION
- COMPUTER OUTLET OR SPECIAL PURPOSE COMMUNICATIONS
- PC — PHOTOELECTRIC CELL
- TC — TIME CLOCK
- BRANCH CIRCUIT CONSISTING OF 2#12 IN MINIMUM SIZE CONDUIT NOT INCLUDING GROUND WIRE
- HOME RUN TO PANELBOARD OR DEVICE – NUMBER OF ARROW HEADS INDICATES NUMBER OF CIRCUITS CONDUIT IN SLAB OR UNDERGROUND
- CIRCUIT BREAKER
- M — METERING
- TRANSFORMER
- GROUND ROD
- UFER/GROUND
- S — SPEAKER
- M — MOTION DETECTOR
- TV — CCTV SURVEILLANCE CAMERA OUTLET
- J — JUNCTION BOX (USED FOR CLARITY ONLY)
- ST — SHUNT TRIP
- GFI — GROUND FAULT INTERRUPTER
- ST — IRRIGATION CONTROLLER

ABBREVIATIONS:

AFF	ABOVE FINISHED FLOOR	CU	COPPER	J-BOX	JUNCTION BOX	TYP	TYPICAL
AFG	ABOVE FINISHED GRADE	DWG	DRAWING	KVA	KILOVOLT AMPS	UNO	UNLESS NOTED OTHERWISE
AL	ALUMINUM	ELEC	ELECTRICAL	KW	KILOWATT	V	VOLTS
BKR	BREAKER	EXT	EXISTING	LTG	LIGHTING	VD	VOLTAGE DROP
C	CONDUIT	GFI	GROUND FAULT INTERRUPT	NTS	NOT TO SCALE	VA	VOLT AMPS
CKT	CIRCUIT	GND	GROUND	PNL	PANEL	WP	WEATHER PROOF
C.O.	CONDUIT ONLY			PWR	POWER	XF	TRANSFORMER

ELECTRICAL LOAD CALCULATION
NEON BONEYARD PARK
TJK # 06078
208/120V
ENTIRE PARK AREA

	LOAD	DF	DEMAND
PARKING LOT			
7 F1 LIGHTING @250W	318 VA	1.25	2,780
TRAIL LIGHTING			
5 F2 LIGHTING @150W	187.5 VA	1.25	1,170
9 F3 LIGHTING @ 50W	62.5 VA	1.25	700
8 F5 LIGHTING @ 50W	62.5 VA	1.25	630
8 F5B LIGHTING @ 4.5W	4.5 VA	1.25	50
10 F6 LIGHTING @ 50W	62.5 VA	1.25	780
RAMADA AND PICNIC LIGHTING			
2 F4 NEON LIGHT	1920 VA	1.25	4,800
38 F4 LIGHTING @ 50W	62.5 VA	1.25	2,340
SIGN LIGHTING			
1 NEON SIGN	20800 VA	1.00	20,800
RECEPTACLES @ STAGE AREA			
14 RECEPTACLE @ 180W	180 VA	1.00	2,520
IRRIGATION CONTROLLER			
1 IRRIGATION CONTROLLER	500 VA	1.00	500
25% FUTURE	27940 VA	0.25	6,990
126022		TOTAL	37,950

37,950 /(208*1.732) = 105 AMPS

SERVICE SIZE = 400 AMPS

LIGHTING FIXTURE SCHEDULE

Copyright 2007 by TJK Consulting Engineers, Inc.

FIXT ID	TYPE	MANUFACTURER AND CATALOG NO.	LAMPS NO.	LAMPS WATT	LAMPS TYPE	CKT VLTS	REMARKS AND MOUNTING	LUMENS	LUMENS/ WATTS
F1	PARKING LOT HIGH PRESSURE SODIUM	LITHONIA LIGHTING KSE2-250S-R2-120-SP04-SF-DBL-LPI-KSE1VG	1	250	PULSE START	120	MOUNT AT ON A 17'-6" POLE PROVIDE A 4"X6" HAND HOLE. PRIOR TO ORDERING LED COLOR WILL BE DETERMINED BY OWNER PROVIDE WITH VANDAL GUARD SEE DETAIL 2/EG1 FOR GROUNDING INFORMATION	16800	66
F1B	PARKING LOT HIGH PRESSURE SODIUM	LITHONIA LIGHTING KSE2-250S-R3-120-SP04-SF-DBL-LPI-KSE1VG	1	250	PULSE START	120	MOUNT AT ON A 17'-6" POLE PROVIDE A 4"X6" HAND HOLE PRIOR TO ORDERING LED COLOR WILL BE DETERMINED BY OWNER PROVIDE WITH VANDAL GUARD SEE DETAIL 1/EG1 FOR GROUNDING DETAIL	16600	66
F2	PEDESTRIAN TRAIL HIGH PRESSURE SODIUM	LITHONIA LIGHTING KSE1-70S-R2-120-SP04-SF-DBL-LPI-KSE1VG	1	70	PULSE START	120	MOUNT ON 14' POLE PROVIDE A 4"X6" HAND HOLE. PRIOR TO ORDERING VERIFY THE COLOR. SEE DETAIL 1/EG1 FOR GROUNDING DETAIL	10900	156
F3	BOLLARD METAL HALIDE	LITELINES INC. TCB1800-RD-HL-100-HPS-120-24-AB-B-ZN-SB	1	100	PULSE START	120	CONCRETE BOLLARD ANCHOR BOLT BASE SEE DETAIL 1/EG1 FOR GROUNDING DETAIL	3500	35
F4	LED LIGHT RAMADA	LED INC LNH-FX/150/120/XX/XX	INCLUDED			120	COLOR TO BE DETERMINED BY OWNER	N/A	N/A
F5	IN-GROUND UPLIGHT METAL HALIDE	KIM LTV764-50W-BF73-PL73-RG60	1	50	PULSE START	120	PRIOR TO ORDERING TRANSFORMER FOR VERIFY CORRECT TRANSFORMER. MOUNT MIN 10" FROM EGDE OF BENCH	2950	59
F5B	RECESSED DOWN LIGHT LED STAINLESS STEEL	WINONA LED - V-LINE GEN4 LED-VL4-18-65-0002-ND24V-FIX-BLK-X-MOD	1	8	LED	24	SEE DETAIL 9/EG2 FOR INSTALLATION. FIXTURE TO BE RECESSED IN MONUMENT. LOW VOLTAGE TRANSFORMER WILL BE INSTALLED IN REAR OF MOMUMENT.	N/A	N/A
F6	IN-GROUND UPLIGHT METAL HALIDE	KIM LTV764-50W-BF73-PL73-RG60	1	50	PULSE START	120	PRIOR TO ORDER REFER TO MANUFACTURER FOR CORRECT LENS COLOR AND CORRECT DISTANCE FROM WALL PRIOR TO INSTALLATION	2950	59
F7	SURFACE MOUNT FLUORESCENT 48"	KENALL CD-4-0-2-32-EB-1-G-2-WL	2	32	F32T8/ SPX35/ ECO	120	REFER TO ARCHITECTS DETAILS FOR MOUNTING OF FIXTURES WITHIN SHELTER ROOF PRIOR TO ORDERING PROVIDE EISA COMPLIANT BALLAST	2950	92

CONTACTOR SCHEDULE

CONTACTOR #	RATING	NO. POLES	LOCATION	CIRCUITS CONTROLLED
C1	30	2	MAIN SWITCHBOARD	MS-1
C2	30	2	MAIN SWITCHBOARD	MS-2
C3	30	2	MAIN SWITCHBOARD	MS-3
C4	30	2	MAIN SWITCHBOARD	MS-4
C5	30	2	MAIN SWITCHBOARD	MS-5
C6	30	3	MAIN SWITCHBOARD	MS-6
C7	60	2	MAIN SWITCHBOARD	MS-7
C8	60	2	MAIN SWITCHBOARD	MS-8

CONTROL SCHEDULE

CONTROL	DESCRIPTION	CONTACTORS CONTROLLED	AREA
PC1/TC1	PARKING AREA	C1	MS ENCLOSURE
PC2/TC2	TRAILS,	C2,C3	MS ENCLOSURE
PC3/TC3	SIGNS, SHELTER, PLAQUE, AREA	C4,C5,C6,C6,C7,C8	MS ENCLOSURE

PLANS APPROVED
ELECTRICAL
Building & Safety Dept.
City of Las Vegas, Nevada
MT AUG 05 2010
Does Not Include Structural, Architectural, Plumbing/Mechanical or Site-Site Improvements. Total No Changes Without Approval Plan is Not a Permit to Deviate from Ordinances

tjk consulting engineers, inc.
5459 S. Durango Dr., Suite10
Las Vegas, NV 89113
P: 702.871.3621
F: 702.871.8353
www.tjkengineers.com

CONSTRUCTION SET

REVISIONS: NO.	DATE:	
1	07/07/09	BUILDING DEPT. COMMENTS
2	08/25/09	BOLLARD POLE BASE
3	07/21/10	RECEPTACLE ADDED

DEPARTMENT OF PUBLIC WORKS
400 E. STEWART
LAS VEGAS, NEVADA 89101
(702) 229-6276

poggemeyer design group, inc.
engineers • planners • surveyors • landscape architects
2501 North Green Valley Parkway • Suite 202 Henderson, NV 89014 • P: 702.263.9379

TITLE: Neon Boneyard Park City of Las Vegas

SHEET: ELECTRICAL LEGEND AND SCHEDULES

DRAWN BY: PM 04-23-09
DESIGNED BY: PM 04-23-09
CHECKED BY: TA 04-23-09
PROJECT NO: TJK# 06078
SCALE: HORIZ. VERT.

PROFESSIONAL ENGINEER STATE OF NEVADA THOMAS A. ANDERSON EXP 12-31-10 ELECTRICAL No. 13946

Sheet EG1
35 of 38
DRAWING NO. 676-12