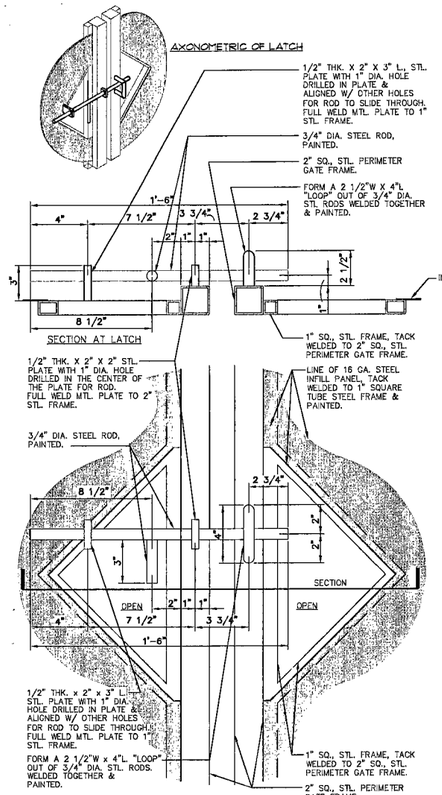

GATE LATCH DETAIL (3)
N.T.S.

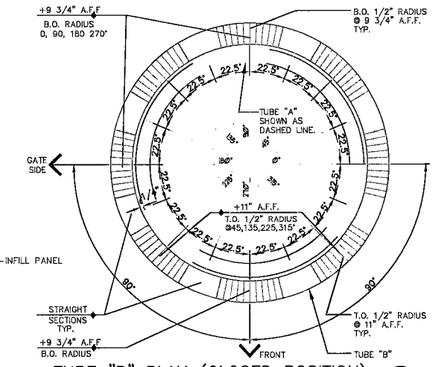

TUBE "B" PLAN (CLOSED POSITION) (4)
N.T.S.

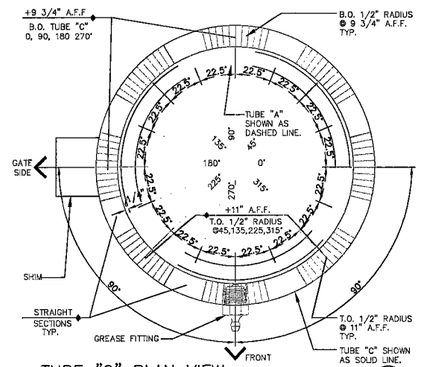

TUBE "C" PLAN VIEW (6)
N.T.S.

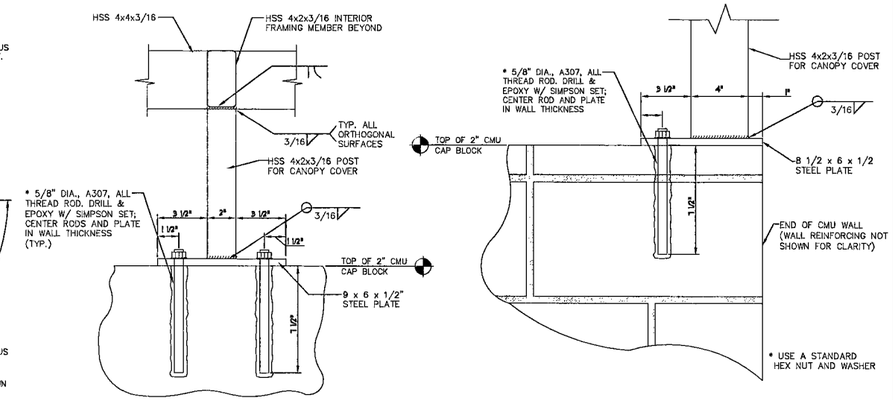

CANOPY COVER CONNECTIONS (2)
N.T.S.

CANOPY COVER CONNECTION TO CMU WALL (1)
N.T.S.

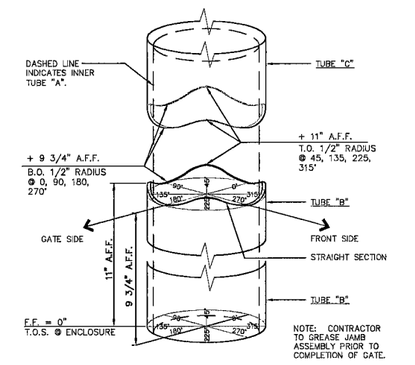

TUBE "B" (AXONOMETRIC) (5)
N.T.S.

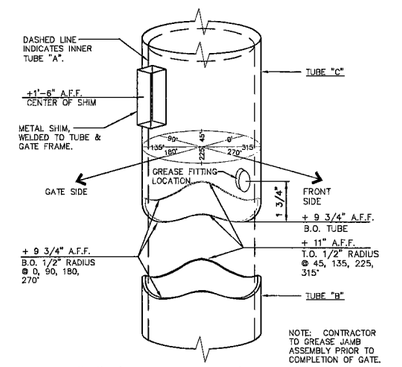

TUBE "C" (AXONOMETRIC) (7)
N.T.S.

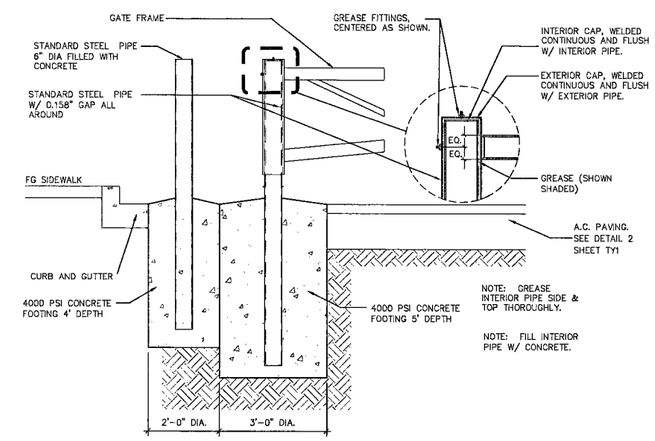

DOUBLE LEAF STEEL SWING VEHICLE GATE HINGE ENLARGEMENT (8)
N.T.S.

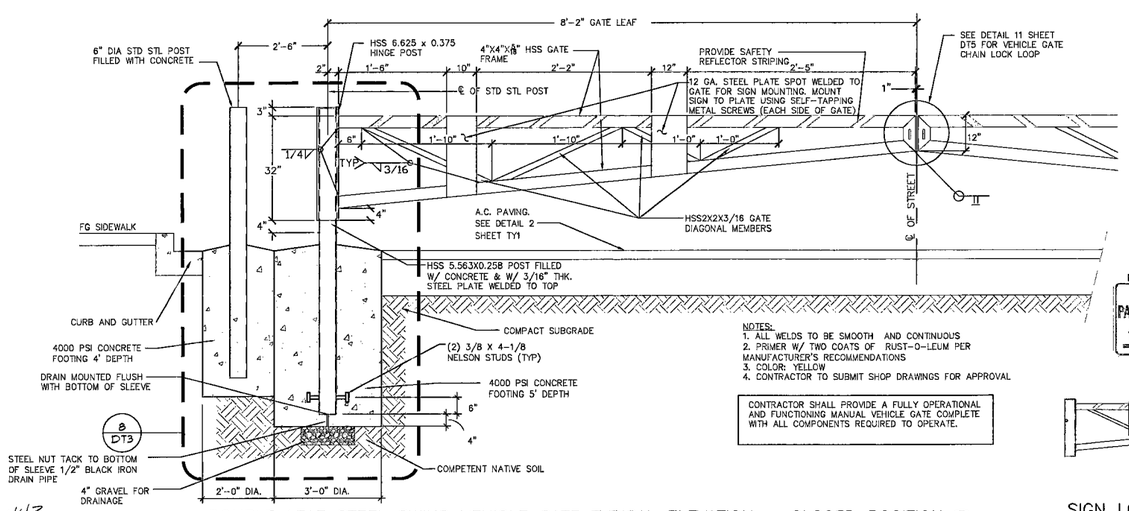

NOTES:
1. ALL WELDS TO BE SMOOTH AND CONTINUOUS
2. PRIMER W/ TWO COATS OF RUST-O-LEUM PER MANUFACTURER'S RECOMMENDATIONS
3. COLOR: YELLOW
4. CONTRACTOR TO SUBMIT SHOP DRAWINGS FOR APPROVAL

CONTRACTOR SHALL PROVIDE A FULLY OPERATIONAL AND FUNCTIONING MANUAL VEHICLE GATE COMPLETE WITH ALL COMPONENTS REQUIRED TO OPERATE.

DOUBLE LEAF STEEL SWING VEHICLE GATE TYPICAL ELEVATION – CLOSED POSITION (10)
N.T.S.

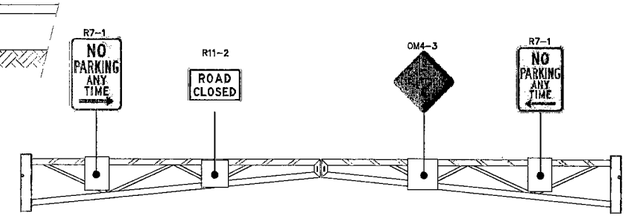

SIGN LOCATION ON VEHICLE SWING GATE STEEL–(FRONT AND BACK) (11)
N.T.S.

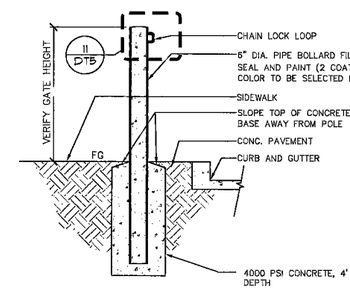

VEHICLE SWING GATE STEEL BOLLARD (9)
N.T.S.

PROFESSIONAL ENGINEER - STATE OF NEVADA
DARREN W. LaMAY
EXP. 12-31-09
CIVIL
No. 15273
6/3/09
STRUCTURAL ONLY

NO.	DATE:	DESCRIPTION	APP'D

REVISIONS

DEPARTMENT OF PUBLIC WORKS
400 EAST STEWART
LAS VEGAS, NEVADA 89101
(702) 229-6276

poggemeyer design group, Inc.
6960 Smoke Ranch #110 • Las Vegas, NV 89128 • P) 702.255.8100 • F) 702.255.8375

TITLE: NEON BONEYARD PARK
CITY OF LAS VEGAS

SHEET: TRASH ENCLOSURE SHEET 2 & SWING VEHICLE GATE DETAILS

DRAWN BY: BMR/BKB/BAM 5/4/09
DESIGNED BY: BMR/BKB/BAM 5/4/09
CHECKED BY: WK/SOD 5/4/09
PROJECT NO: 06089C
SCALE: N.T.S.

PROFESSIONAL ENGINEER - STATE OF NEVADA
SAM C. DUNNAM
EXP. 12-31-10
CIVIL
No. 7699

Sheet
DT3
13 of 37

CLV DRAWING NO.
676-12

HANSEN NO. 17994

G:\06039A NEON BONEYARD\CIVIL\DET3.dwg Mon, 01 Jun 2009 – 11:42am

120443