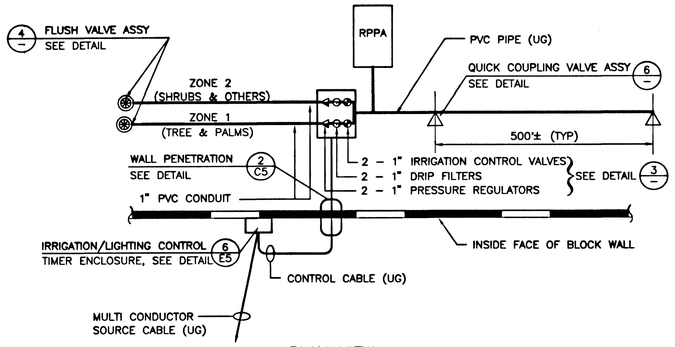

PLAN VIEW

NOTES:

1. QUICK COUPLING VALVE ASSEMBLIES SHALL BE INSTALLED AT A DISTANCE OF 500'± INTERVALS THROUGH THE TOTAL LENGTH OF THE LINE OR A MINIMUM OF TWO PER SITE.
2. FLUSH VALVE ASSEMBLY SHALL BE INSTALLED AT THE END OF EACH WATER ZONE LINE.

IRRIGATION CONTROL 1 L2, L4

NOT TO SCALE

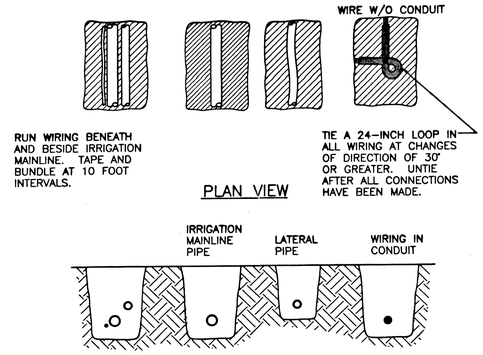

SECTION VIEW

NOTES:

1. SLEEVE BELOW ALL HARDSCAPE ELEMENTS WITH CLASS 200 PVC TWICE THE DIAMETER OF THE PIPE OR WIRE BUNDLE WITHIN.
2. FOR PIPE AND WIRE BURIAL DEPTHS SEE SPECIFICATIONS.
3. ALL SOLVENT WELD PLASTIC PIPING TO BE SNAKED IN TRENCH AS SHOWN.

IRRIGATION PIPE AND WIRE TRENCHING DETAIL 2 L2, L4

NOT TO SCALE

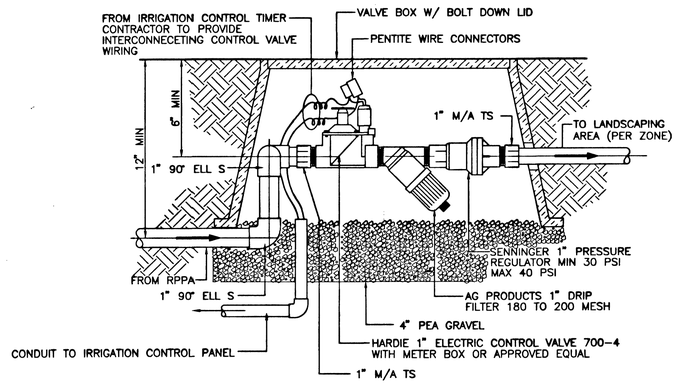

IRRIGATION CONTROL VALVE INSTALLATION DETAIL 3 L2, L4

NOT TO SCALE

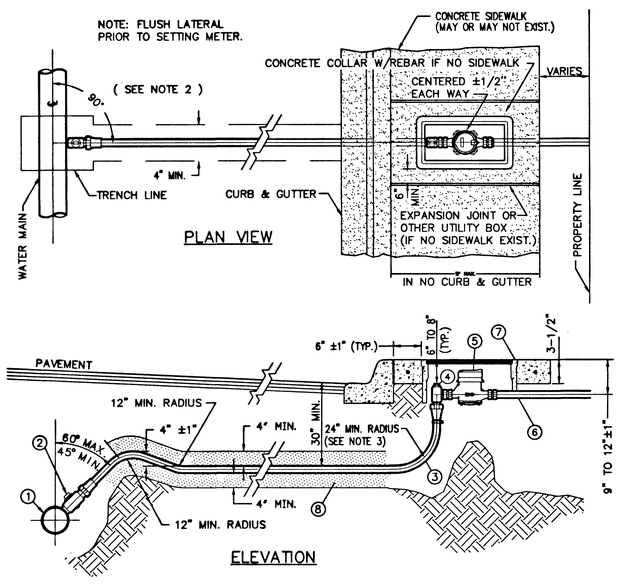

LEGEND

1. THREADED COLLAR (1" LATERALS ONLY) OR SERVICE SADDLE.
2. CORPORATION STOP.
3. SERVICE LATERAL SIZE TO MATCH METER (1" MINIMUM).
4. UPSTREAM BALL ANGLE METER STOP TO MATCH METER SIZE (1" x 1" MINIMUM) WITH LOCK WING AND WITHOUT LEVER HANDLE. FOR ALL 5/8" AND 3/4" METERS USE A 1" x 3/4" ADAPTER.
5. DISPLACEMENT TYPE WATER METER, AGENCY APPROVED AND SUPPLIED, CONTRACTOR INSTALLED.
6. TAIL PIECE (EXTENDS TO PROPERTY LINE).
7. METER BOX (1" TYPICAL, MINIMUM).
8. SAND BACKFILL FULL WIDTH OF TRENCH.

NOTES:

1. ONE COUPLING IS ALLOWED BETWEEN THE CORPORATION STOP AND THE ANGLE METER STOP, IF THE TOTAL LATERAL LENGTH IS GREATER THAN 40 FEET.
2. CUL-DE-SAC SERVICE LATERALS MUST FOLLOW THE MOST DIRECT ROUTE POSSIBLE BETWEEN SERVICE SADDLE AND ANGLE METER STOP. HORIZONTAL BENDING RADIUS ALLOWED FOR 1" TUBING IS 12" MIN. AND 24" MIN. FOR 1 1/2" AND 2" TUBING. MAXIMUM DEFLECTION ANGLE ALLOWED IS 90 .
3. IF A 24" MIN. RADIUS CAN NOT BE MAINTAINED AN APPROPRIATE SIZE 90 COMPRESSION OR FLARED CONNECTION SHOULD BE USED.
4. USE OF 5/8 METERS NOT APPROVED BY ALL AGENCIES.
5. FLUSH LATERAL PRIOR TO SETTING METER.

WATER IRRIGATION STUDY METER INSTALLATION DETAIL 5 L2, L4, C2

NOT TO SCALE

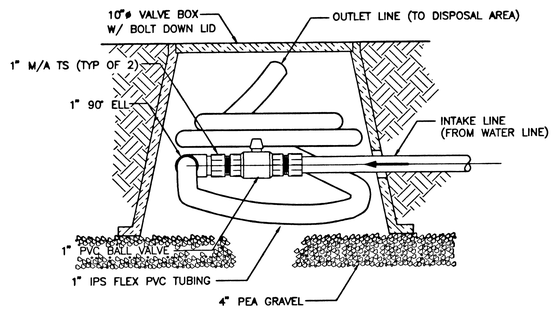

FLUSH VALVE ASSEMBLY DETAIL 4 L2, L4

NOT TO SCALE

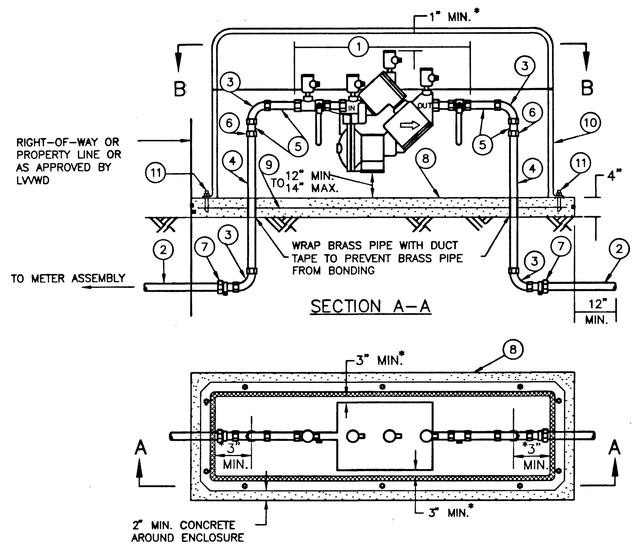

NOTE:

RPPA ASSEMBLY INCLUDING ABOVE GRADE PIPING NOT TO BE PAINTED.

1. APPROVED REDUCED PRESSURE PRINCIPLE ASSEMBLY
2. COPPER TUBING – TYPE "K"
3. BRASS 90° ELBOW – IRON PIPE THREAD
4. BRASS PIPE – STANDARD – T.B.E.
5. BRASS CLOSE NIPPLE
6. BRASS UNION – IRON PIPE THREAD
7. METER COUPLING
8. CONCRETE SLAB – 3000 P.S.I.
9. WELDED WIRE FABRIC – W4.0 x W4.0
10. FIBERGLASS ENCLOSURE – SEE UDS PLATE 11A-2
11. 3/8"-16NC x 2-3/4"LG WEDGE ANCHOR BOLT
12. STAINLESS STEEL HATCH SPRING
13. POLISHED STAINLESS STEEL PIANO HINGE
14. CHROME PLATED ZINC SWIVEL HASP-BOTTOM
15. CHROME PLATED ZINC SWIVEL HASP-TOP
16. CHROME PLATED ZINC HANDLE

INSIDE ENCLOSURE DIMENSIONS

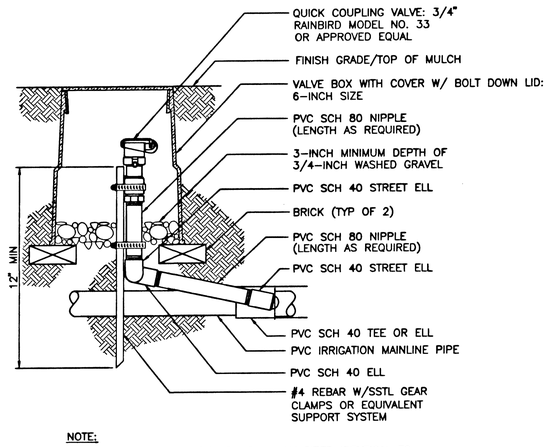

NOTE:

FURNISH FITTINGS AND PIPING NOMINALLY SIZED IDENTICAL TO NOMINAL QUICK COUPLING VALVE INLET SIZE.

QUICK COUPLING VALVE ASSEMBLY DETAIL 6 L2, L4

NOT TO SCALE

BACKFLOW PREVENTION ASSEMBLY, REDUCED PRESSURE PRINCIPAL ASSEMBLY, 7

NOT TO SCALE

40654

565-368

LAS VEGAS VALLEY WATER DISTRICT
1001 S. VALLEY VIEW BOULEVARD
LAS VEGAS, NEVADA 89153
(702) 870-2011

Las Vegas Valley Water District

VERIFY SCALE
1/2 0 1/2 1
BAR REPRESENTS ONE AND ONE-HALF INCHES ON ORIGINAL

MISCELLANEOUS SITE IMPROVEMENTS
FY 2001/2002, PHASE I

LANDSCAPE AND IRRIGATION DETAILS – I

SCALE NONE

I:\contract\c1053\active\C05.dwg Plotted @ 07:34 on 04/11/02

DRAWN BY: D.C. / BLM / RCW 02/26/01
CHECKED BY: TAI WANG
RECOMMENDED BY: JOSEPH Y. LIN R.P.E. 11059 DATE 4/11/2002
ACCEPTED BY: SHAWN P. MOLLUS R.P.E. 9651 DATE 4/11/02

PROFESSIONAL ENGINEER - STATE OF NEVADA
JOSEPH YOW-MING LIN
No. 11059
CIVIL
4/11/2002

CONTRACT NUMBER
C1053

DRAWING NUMBER L5
SHEET 16 OF 23