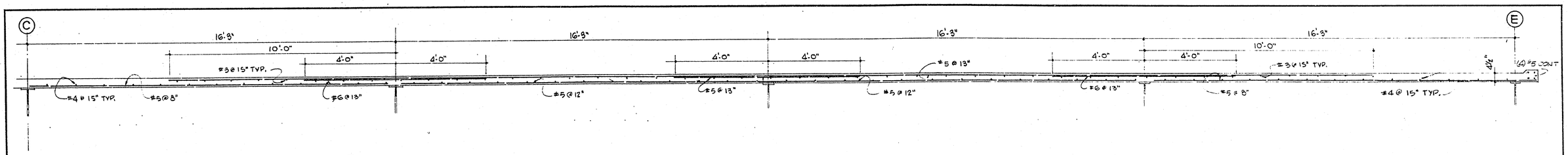

SLAB SECTION 1 / S-7

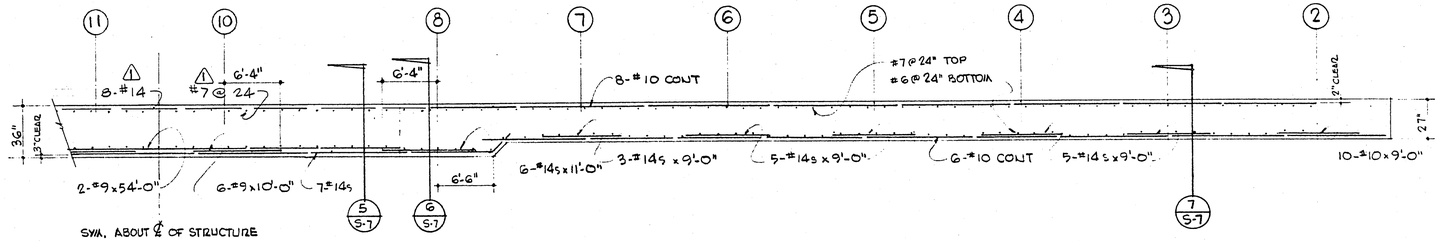

SECTION 2 / S-7

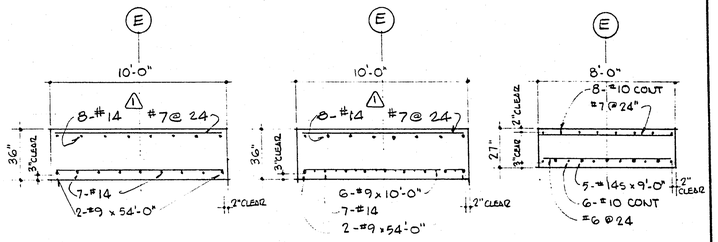

SECTION 5 / S-7
SCALE - 1/4" = 1'-0"

SECTION 6 / S-7
SCALE - 1/4" = 1'-0"

SECTION 7 / S-7
SCALE - 1/4" = 1'-0"

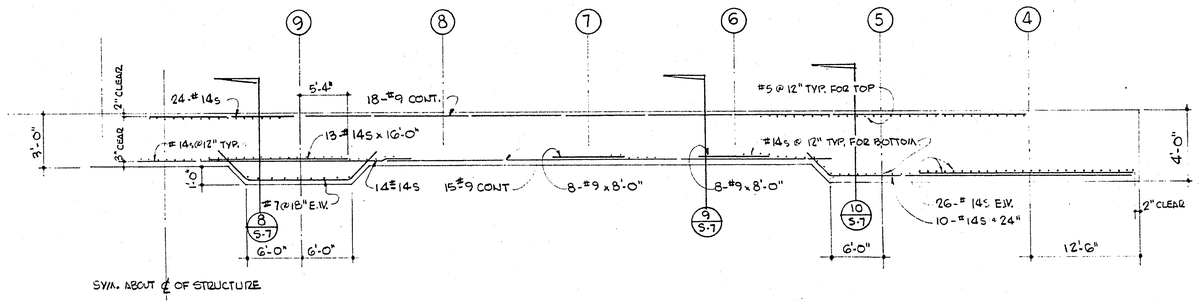

SECTION 3 / S-7

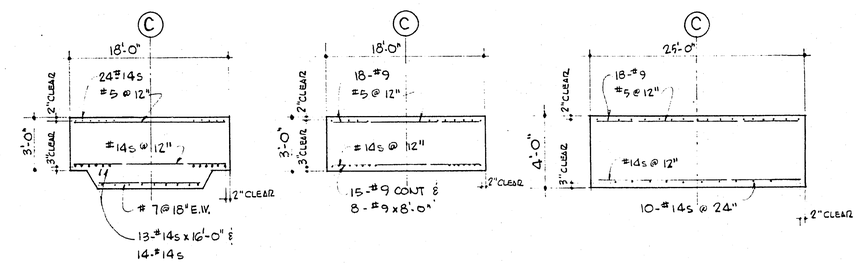

DETAIL 8 / S-7

DETAIL 9 / S-7

DETAIL 10 / S-7

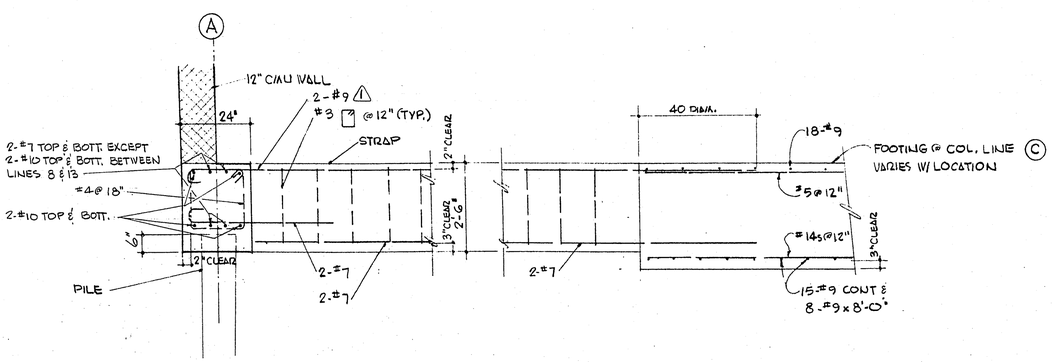

DETAIL 4 / S-7
SCALE - 1/2" = 1'-0"

DETAIL 11 / S-7
SCALE - 1/2" = 1'-0"

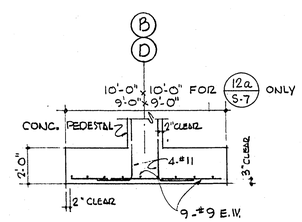

DETAIL 12 / S-7 & 12a / S-7
SCALE - 1/4" = 1'-0"

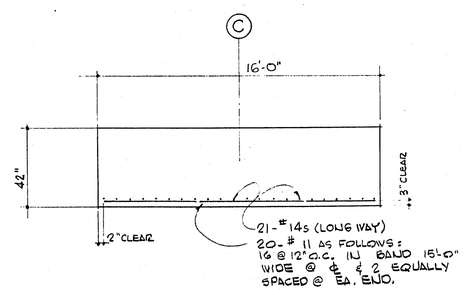

DETAIL 13 / S-7
SCALE - 1/4" = 1'-0"

THE DESIGNS AND IDEAS INDICATED BY THESE DRAWINGS WERE CREATED FOR USE ON THIS PROJECT ONLY AND ARE THE PROPERTY OF EDWARD B. HENDRICKS ASSOC. THEY MAY NOT BE USED FOR ANY OTHER PURPOSE WHATSOEVER WITHOUT THE WRITTEN PERMISSION OF THE OFFICE OF EDWARD B. HENDRICKS ASSOCIATES.

DANIEL M. CASHDAN
STRUCTURAL ENGINEER
535 EAST SAHARA AVE. • LAS VEGAS, NEVADA

EDWARD B. HENDRICKS ASSOCIATES
ARCHITECTURE • PLANNING • ENGINEERING
E. B. HENDRICKS A.I.A.
FRED L. KENNEDY
G. L. JACOBSON
537 E. SAHARA AVE.
LAS VEGAS, NEVADA
PHONE • 735-0902

MUNICIPAL PARKING GARAGES
CITY OF LAS VEGAS NEVADA
OGDEN SITE

DIRECTOR OF PUBLIC WORKS

SLAB & FOOTING SECTIONS & DETAILS

DATE	SHEET	OF
9-8-66	S 7	9
JOB NO.	I.D.	9
DRAWN BY JACOBSON		

DATE	BY	REVISIONS
	J.C.	1 CLARIFICATION REVISION

6/66 DIETERICH-POST CLEARPRINT 1020-8

512-V38