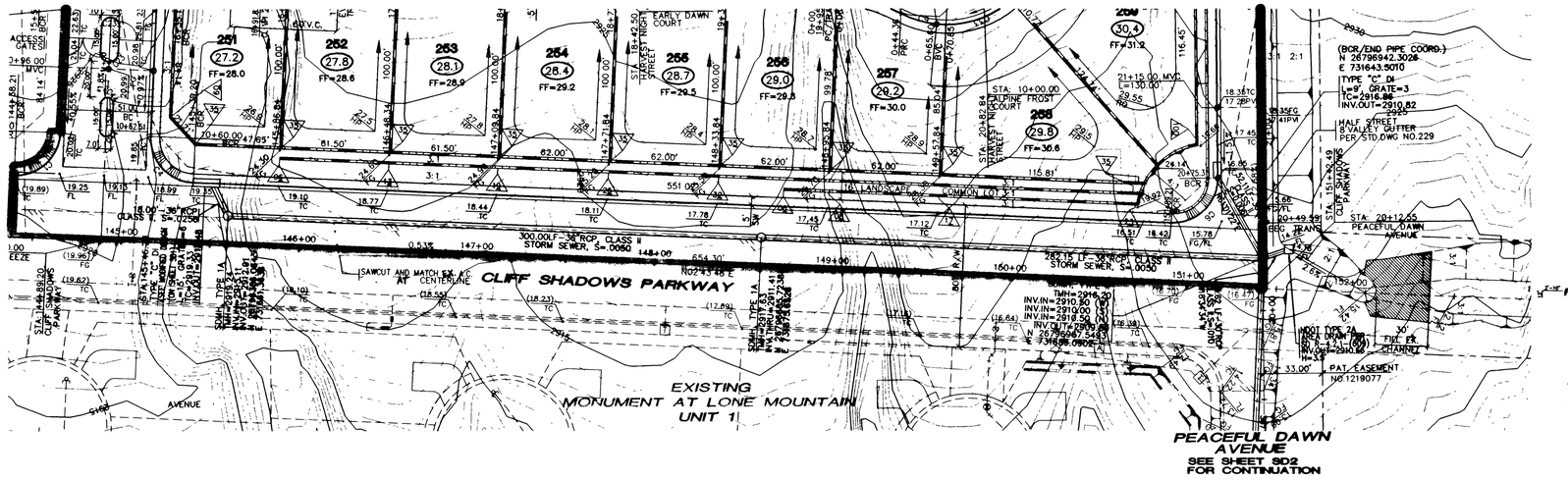

PLAN

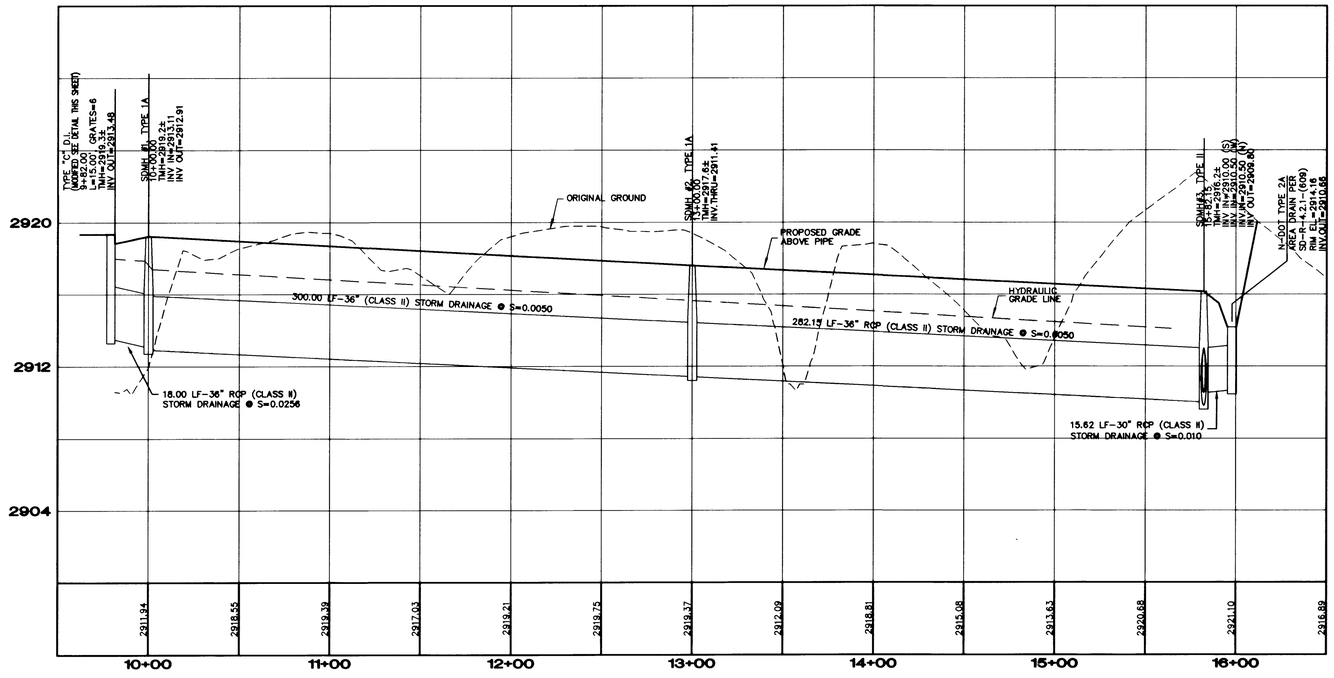

PROFILE

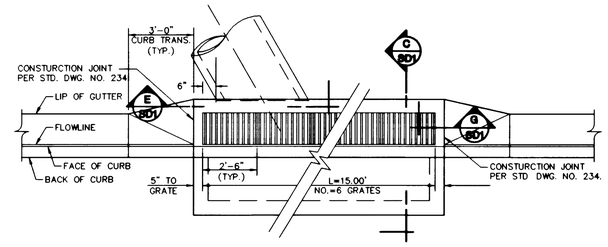

B SD1 DROP INLET PLAN

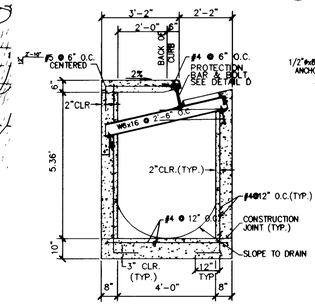

C SD1 DROP INLET PLAN

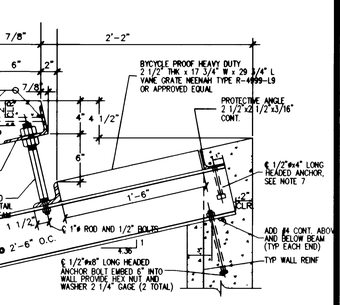

D SD1 DETAIL D

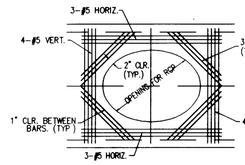

E SD1 SECTION

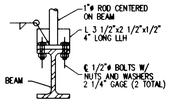

F SD1 DETAIL F

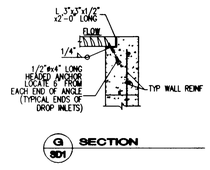

G SD1 SECTION

LEGAL DESCRIPTION

BEING A PORTION OF THE NORTHWEST QUARTER (NW 1/4) OF SECTION 1, TOWNSHIP 20 SOUTH, RANGE 59 EAST, M.D.M., CLARK COUNTY, NEVADA.

BASIS OF BEARINGS

THE BASIS OF BEARING FOR THIS PROJECT IS GRID NORTH AS DEFINED BY THE NEVADA COORDINATE SYSTEM OF 1983 (NCS83), EAST ZONE, (2701) DETERMINED BY CLARK COUNTY GIS CONTROL POINTS 808,819, AND 877, AS SHOWN ON A RECORD OF SURVEY ON FILE IN THE CLARK COUNTY, NEVADA, RECORDER'S OFFICE, IN BOOK 88 OF SURVEYS, AT PAGE 53.

BENCHMARK

PROJECT VERTICAL DATUM: NAVD88

CITY OF LAS VEGAS BENCHMARK 1LV00-4SES
NAVD88 ELEV: 713.8497 METERS (2342.02 FEET)

RIVET AND PLATE IN TOP OF CURB, NORTHWEST RETURN RETURN OF ALEXANDER ROAD AND BUFFALO DRIVE.

NOTE:

CONTRACTOR SHALL VERIFY HORIZONTAL AND VERTICAL LOCATION OF EXISTING UTILITIES AND NOTIFY THE DESIGN ENGINEER IMMEDIATELY OF ANY DISCREPANCIES PRIOR TO CONSTRUCTION.

NORTH

GRAPHIC SCALE

40 0 20 40 80

1" = 40'

Avoid cutting underground utility lines. It's easy.
Call before you Dig
1-800-227-2600

Avoid overhead power line contact
Call before you OVERHEAD
1-702-593-6111

32524

REV	DATE	BY	REVISION

STANPARK HOMES
3320 N BUFFALO DRIVE, SUITE 207
LAS VEGAS, NEVADA 89129
702-396-3887

2727 SOUTH RAINBOW BOULEVARD LAS VEGAS, NEVADA 89146-5148
PH (702) 873-7550 FAX (702) 362-2597
nevada CONSULTING ENGINEERS ● PLANNERS ● LAND SURVEYORS

SHEET
RCP STORM SEWER PLAN AND PROFILE ALONG CLIFF SHADOWS PARKWAY

TITLE
MONUMENT AT LONE MOUNTAIN UNIT 8

DRAWN BY: VAV 5-12-00
DESIGNED BY: BR 5-12-00
CHECKED BY: BR 5-12-00
PROJECT NO: 5830-6
SCALE: 1"=40' HORIZ. 1"=4' VERT.

SEAL
PROFESSIONAL ENGINEER STATE OF NEVADA THOMAS E. HAYES 9426
5/22/01

SHEET SD1
20 OF 21 SHEETS

DRAWING NO. 3274-4636-6

H:\5830\UNIT8\5830STM8.DWG (BR-STRM1)