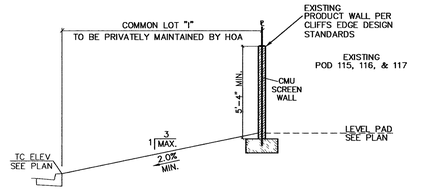

NOTE:
ALL STRUCTURAL FOR RETAINING AND SCREEN WALLS BY OTHERS.

COMMON LOT "I" (19)
NOT TO SCALE

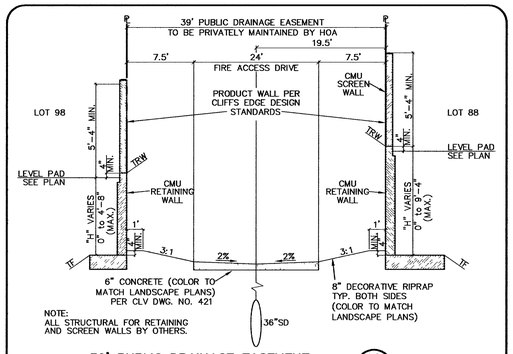

NOTE:
ALL STRUCTURAL FOR RETAINING AND SCREEN WALLS BY OTHERS.

39' PUBLIC DRAINAGE EASEMENT (18)
NOT TO SCALE

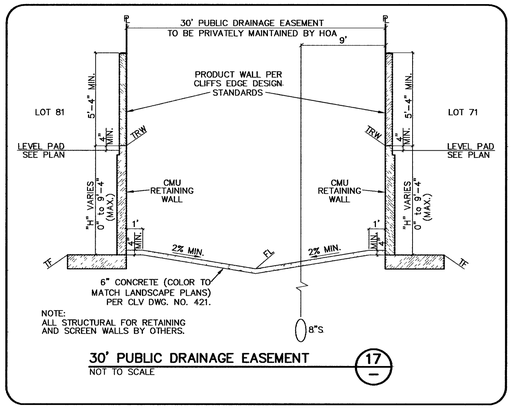

NOTE:
ALL STRUCTURAL FOR RETAINING AND SCREEN WALLS BY OTHERS.

30' PUBLIC DRAINAGE EASEMENT (17)
NOT TO SCALE

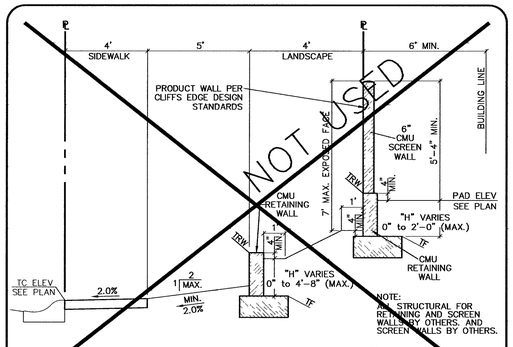

TYPICAL CORNER LOT GRADING with RETAINING (16)
NOT TO SCALE

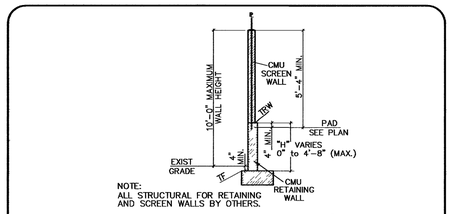

NOTE:
ALL STRUCTURAL FOR RETAINING AND SCREEN WALLS BY OTHERS.

REAR YARD RETAINING WALL (15)
NOT TO SCALE

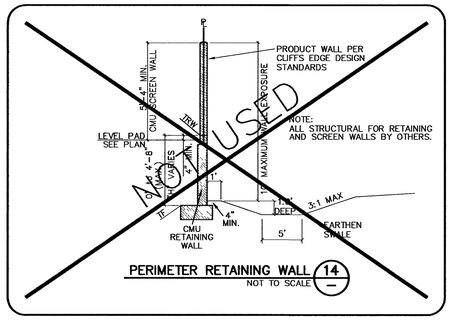

NOTE:
ALL STRUCTURAL FOR RETAINING AND SCREEN WALLS BY OTHERS.

PERIMETER RETAINING WALL (14)
NOT TO SCALE

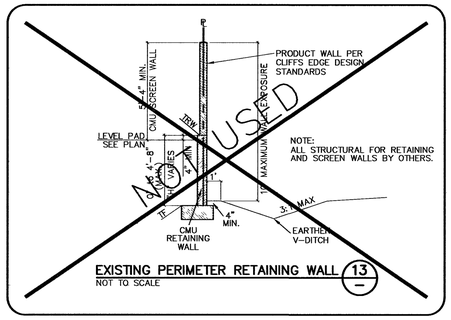

NOTE:
ALL STRUCTURAL FOR RETAINING AND SCREEN WALLS BY OTHERS.

EXISTING PERIMETER RETAINING WALL (13)
NOT TO SCALE

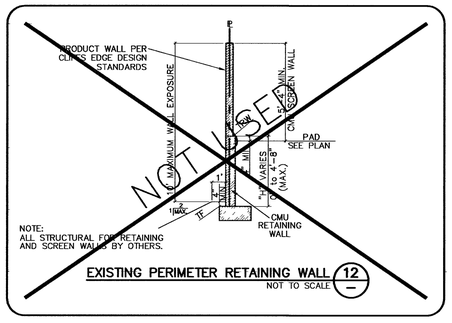

NOTE:
ALL STRUCTURAL FOR RETAINING AND SCREEN WALLS BY OTHERS.

EXISTING PERIMETER RETAINING WALL (12)
NOT TO SCALE

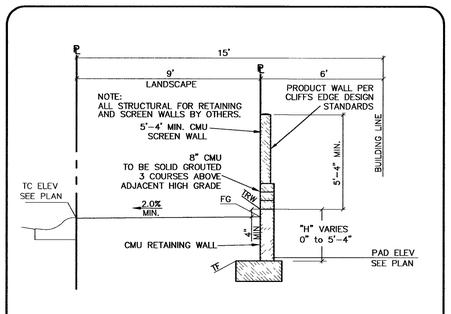

TYPICAL CORNER LOT GRADING with RETAINING (11)
NOT TO SCALE

NOTE

1. ALL STRUCTURAL DETAILS FOR RETAINING AND SCREEN WALLS BY OTHERS.

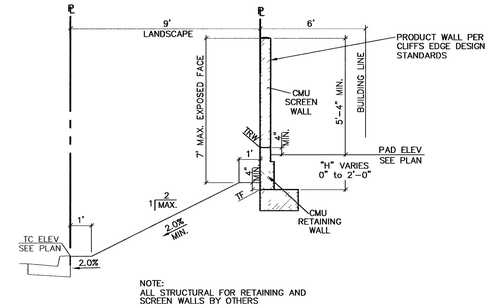

NOTE:
ALL STRUCTURAL FOR RETAINING AND SCREEN WALLS BY OTHERS

TYPICAL CORNER LOT GRADING with RETAINING (8)
NOT TO SCALE

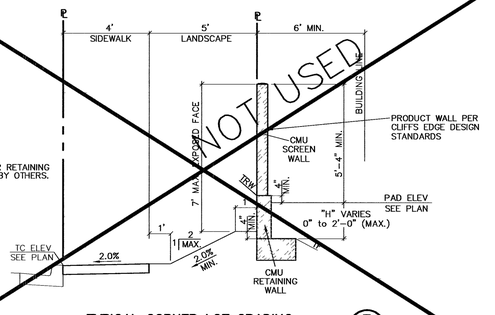

NOTE:
ALL STRUCTURAL FOR RETAINING AND SCREEN WALLS BY OTHERS.

TYPICAL CORNER LOT GRADING with RETAINING (7)
NOT TO SCALE

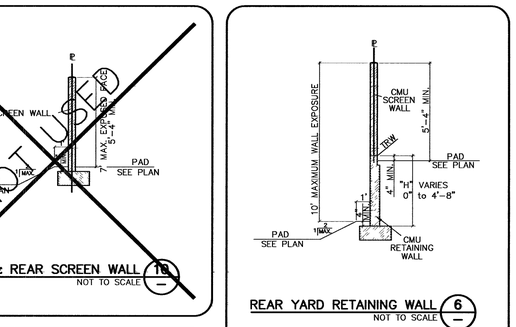

SIDE & REAR SCREEN WALL (10)
NOT TO SCALE

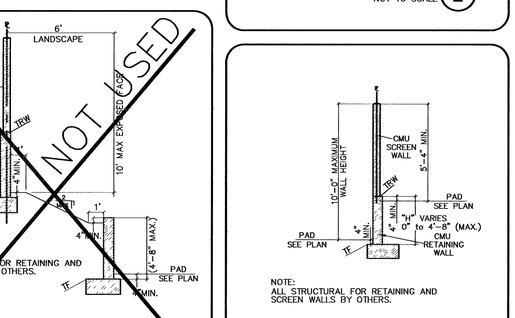

NOTE:
ALL STRUCTURAL FOR RETAINING AND SCREEN WALLS BY OTHERS.

REAR RETAINING WALLS with PLANTER (9)
NOT TO SCALE

REAR YARD RETAINING WALL (6)
NOT TO SCALE

NOTE:
ALL STRUCTURAL FOR RETAINING AND SCREEN WALLS BY OTHERS.

SIDE YARD RETAINING WALL (5)
NOT TO SCALE

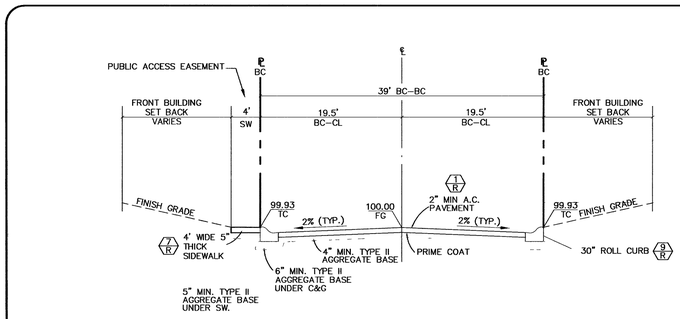

39' RESIDENTIAL STREET (PRIVATE W/P.U.E.)
WITH 4' ATTACHED SIDEWALK ON ONE SIDE (SEE PLAN FOR LOCATION)
NOT TO SCALE (4)

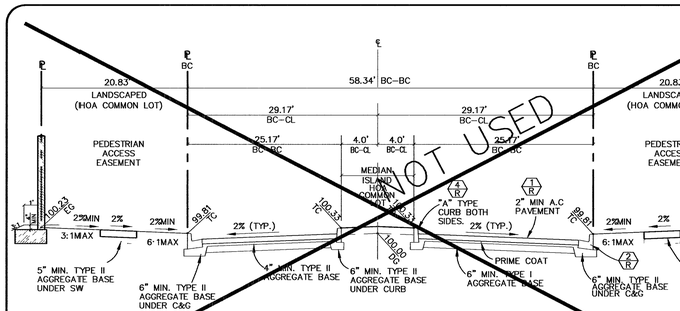

EXISTING PARCEL ENTRY (PRIVATE W/P.U.E.)
NOT TO SCALE (3)

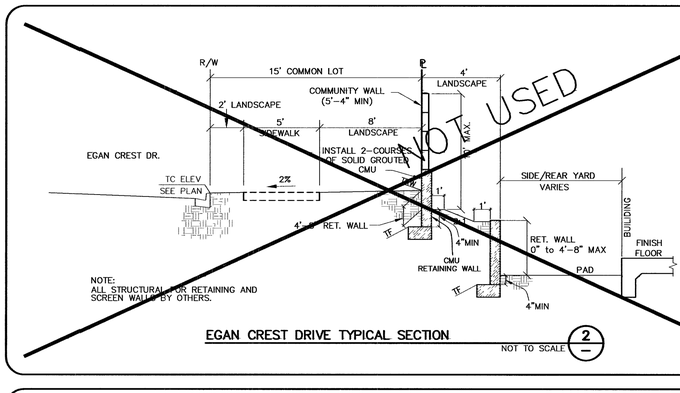

NOTE:
ALL STRUCTURAL FOR RETAINING AND SCREEN WALLS BY OTHERS.

EGAN CREST DRIVE TYPICAL SECTION
NOT TO SCALE (2)

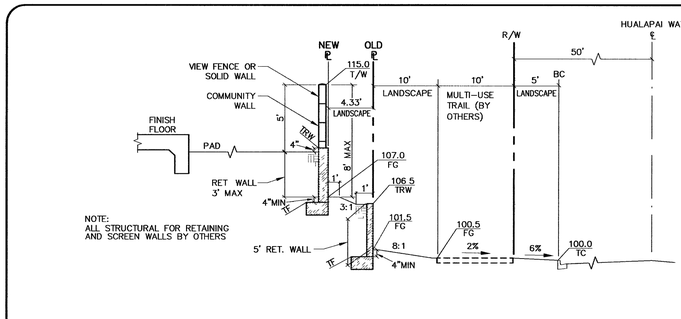

NOTE:
ALL STRUCTURAL FOR RETAINING AND SCREEN WALLS BY OTHERS

EXISTING HUALAPAI WAY TYPICAL SECTION
NOT TO SCALE (1)

STATE OF NEVADA
KEITH J. HATTON
No. 15590
PROFESSIONAL ENGINEER
CIVIL

DATE: 6/26/07

REV	DATE	DESCRIPTION	DATE	AGEN. APP	DATE	GOV. APP

ISSUED FOR:

ISSUE DATE:

DESIGN: DFF
DRAWN: AM/MDY
CHECK: SWN
ISSUE DATE:
ISSUE EDITOR:
PLOT DATE: 06-15-06
PLOT TIME: 14:57:57

G. C. WALLACE, INC.
Engineers/Planners/Surveyors
555 CORPORATE CIRCLE, SUITE B, LAS VEGAS, NEVADA 89123
TELEPHONE: (702) 896-2000 FAX: (702) 896-2299

c:\7431194\Dwg\Phase 3\mps\114c008.dwg

MADISON GROVE AT PROVIDENCE - PHASE 3 (POD 114)
A RESIDENTIAL PLANNED DEVELOPMENT
TOLL BROTHERS

DETAILS I

DRAWING
8
8 OF 22 SHTS

JOB NO. 7431194

CLV DRAWING NO. 107Y4892-3

93546

pge2435.dwg 030624 wsk