NOTE:

1. FRONT OF LOOP MUST LINE UP WITH NOSE OF ISLAND.
2. INSULATION TEST FOR EACH LOOP TO GROUND MUST NOT READ LESS THAN 10 MEG OHMS TO INFINITY. (USE A MEGGER)
3. USE COLOR CODED 4 TURNS #12 XHHW AS SHOWN.

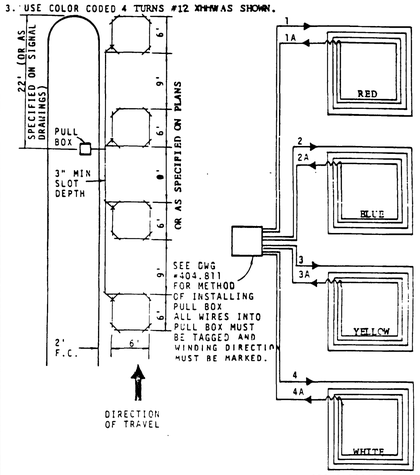

SEE DWG. #404.829 FOR WIRE CONNECTIONS
SEE DWG #404.810 FOR SAWCUT DETAILS

MULTIPLE LOOP SYSTEM FOR LEFT TURN POCKET	UNIFORM STANDARD DRAWINGS FOR PUBLIC SERVICE CONSTRUCTION CITY OF LAS VEGAS
ISSUED C.L.V. STANDARD AUG 1977	DRAWING NUMBER 404.827

NOTE: 4 TURNS OF WIRE PER LOOP SHOWN. ALWAYS INSTALL 4 TURNS OF #12 XHHW UNLESS OTHERWISE SPECIFIED ON PLANS. TRAFFIC ENGINEER SHALL ESTABLISH LATERAL LOCATIONS ON ROADS WITHOUT MARKED LANES. WINDING DIRECTION SHALL BE INDICATED ON WIRE.

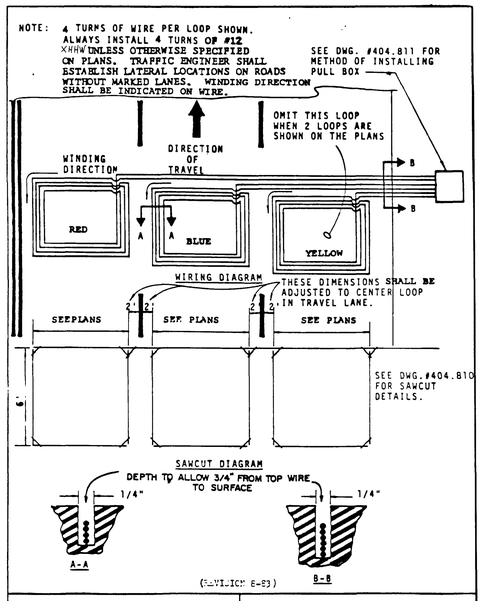

(REVISION 8-83)

3 INDUCTION LOOPS FOR 3 TRAVEL LANES	UNIFORM STANDARD DRAWINGS FOR PUBLIC SERVICE CONSTRUCTION CITY OF LAS VEGAS
ISSUED C.L.V. STANDARD AUG 1977	DRAWING NUMBER 404.825

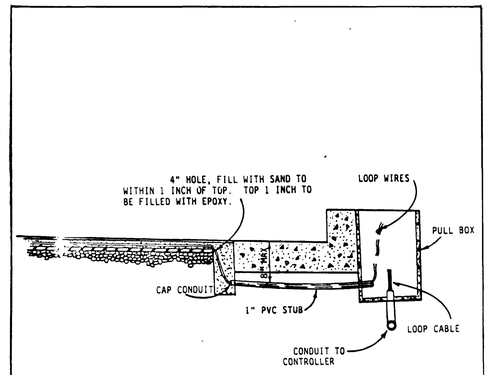

NOTES: PATCH SLOT AND HOLE WITH EPOXY, REMOVE OVERFLOW BEFORE IT HARDENS.

(REVISION 8-83)

DETAILS @ PULL BOX AND SAWCUTS	UNIFORM STANDARD DRAWINGS FOR PUBLIC SERVICE CONSTRUCTION CITY OF LAS VEGAS
ISSUED C.L.V. STANDARD AUG 1977	DRAWING NUMBER 404.811

GENERAL SPECIFICATIONS

ROADWAY EMBEDDED LOOP WIRES

1. GENERAL
   1.1 All loop wires are to be installed after the final layer of A.C. and before any seal coat.
   1.2 The loop shall be made with a single conductor type XH.H.W. no. 12 A.W.G., neoprene-jacketed, seven strand copper wire. All wire must be color coded as shown on the standard drawings. The wire must be installed in the sawed slot winding in the direction as shown on the standard drawings, with a minimum of 5' of both ends of the wire coiled and stored in the pullbox. The ends of multiple loops into a pullbox, must be properly tagged as shown on the standard drawings.
   1.3 The sawed slot shall be blown clean of all loose material and dried. The wire shall be carefully pushed into the slot with a blunt stick to avoid damaging its insulation.
2. CONNECTING CABLES
   2.1 Each wound loop system shall have a seperate cable installed to the controller cabinet. Each cable shall be a one (1) twisted pair of #12 A.W.G. polyethylene cable conforming in its entirety to IMSA Specs. 19-2.
3. LOOP TESTS
   3.1 Insulation test for each loop to ground must not read less than 10 meg ohms to infinity using a megger. Insulation test beween loops shall be no less than 5 meg ohms.

NOTE
1. FRONT OF LOOP MUST LINE UP WITH NOSE OF ISLAND.
2. INSULATION TEST FOR EACH LOOP TO GROUND MUST NOT READ LESS THAN 10 MEG OHMS TO INFINITY (USE A MEGGER)
3. USE COLOR CODED 4 TURNS NO 12 XHHW AS SHOWN.
4. SEE DWG 404.829 FOR WIRE CONNECTIONS

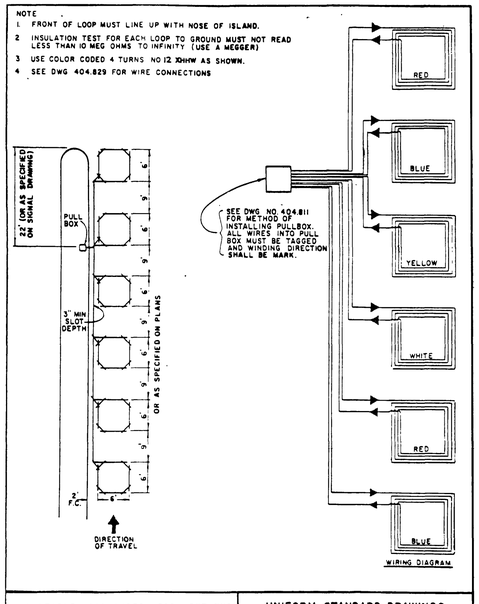

MULTIPLE LOOP SYSTEM FOR LEFT TURN POCKET	UNIFORM STANDARD DRAWINGS FOR PUBLIC SERVICE CONSTRUCTION CITY OF LAS VEGAS
ISSUED C.L.V. STANDARD AUG 1977	DRAWING NUMBER 404.826

NOTE: 4 TURNS OF WIRE SHOWN. ALWAYS INSTALL 4 TURNS OF #12 XHHW UNLESS OTHERWISE SPECIFIED ON PLANS. WINDING DIRECTION SHALL BE INDICATED ON WIRE.

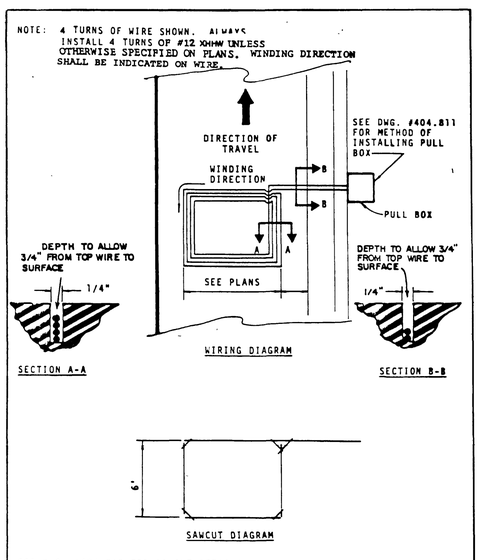

SEE DWG. #404.810 FOR SAWCUT DETAILS.

(REVISION 8-83)

1 INDUCTION LOOP FOR 1 TRAVEL LANE	UNIFORM STANDARD DRAWINGS FOR PUBLIC SERVICE CONSTRUCTION CITY OF LAS VEGAS
ISSUED C.L.V. STANDARD AUG 1977	DRAWING NUMBER 404.820

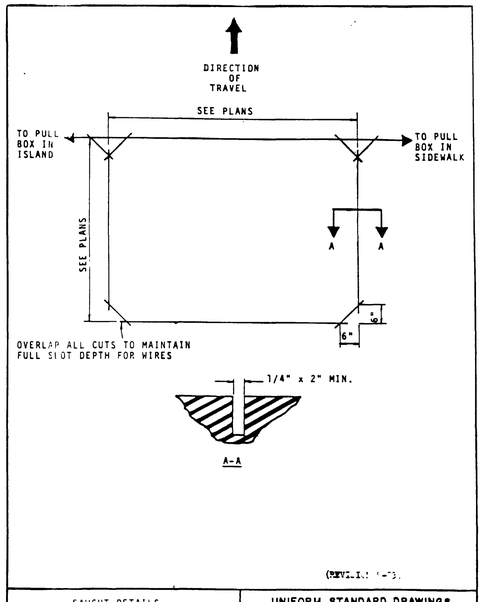

(REVISION 8-83)

SAWCUT DETAILS FOR INDUCTION LOOPS	UNIFORM STANDARD DRAWINGS FOR PUBLIC SERVICE CONSTRUCTION CITY OF LAS VEGAS
ISSUED C.L.V. STANDARD AUG 1977	DRAWING NUMBER 404.810

CONTRACT DRAWING
APR 18 1990

City of Las Vegas
400 E. Stewart
Las Vegas, Nevada
89101

PROFESSIONAL ENGINEER — CIVIL — No 9141

ENGINEER
THE KEITH COMPANIES NEVADA
- PLANNING
- CIVIL ENGINEERING
- ARCHITECTURE
- LANDSCAPE ARCHITECTURE
- LAND SURVEYING
- CONSTRUCTION MANAGEMENT

4052 S. INDUSTRIAL RD., LAS VEGAS, NV. 89103. (702) 733-0360

No.	Date	By	Description:
	/ /		
	/ /		
	/ /		
	/ /		
	/ /		
	/ /		
	/ /		

REVISIONS

TKC JOB NO.: E608-001
DESIGNED BY: DJM
DRAWN BY: DJM
DATE: / /
SCALE: NO SCALE

SHEET TITLE: TRAFFIC LOOP UNIFORM STANDARD DRAWINGS & SPECS.

PROJECT TITLE: MARYLAND PARKWAY FROM SAHARA AVE. TO STEWART AVE.

SHEET NO.: 31 OF 33 SHEETS

BID NO. 90.1715.11 12-3-461 107 - V1656

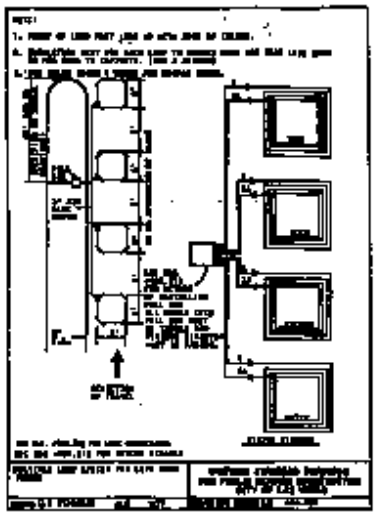

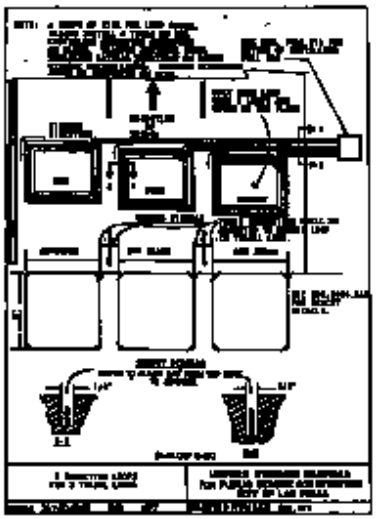

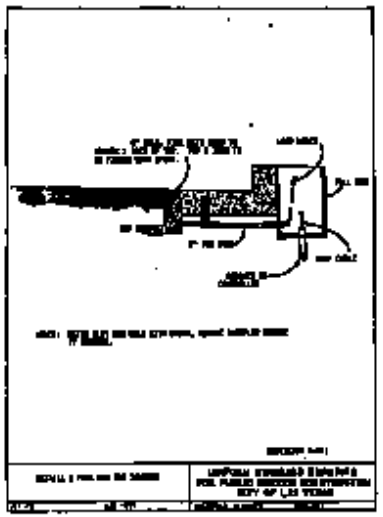

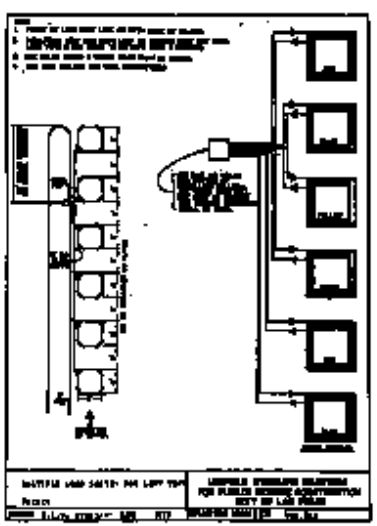

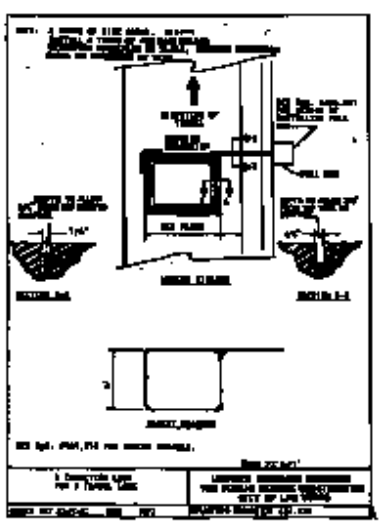

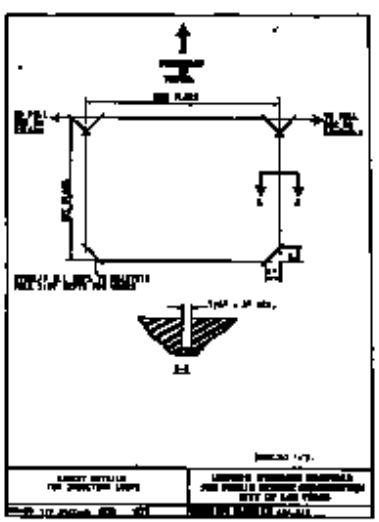

CONTRACT DRAWING

City of Los Vegas
400 E. Stewart
Las Vegas, Nevada
89101

THE KEITH COMPANIES NEVADA

REVISIONS

TRAFFIC LOOP
UNIFORM STANDARD DRAWINGS & SPECS.

MARYLAND PARKWAY
FROM
SAHARA AVE. TO STEWART AVE.

31

DO NOT SCALE 12-3-97