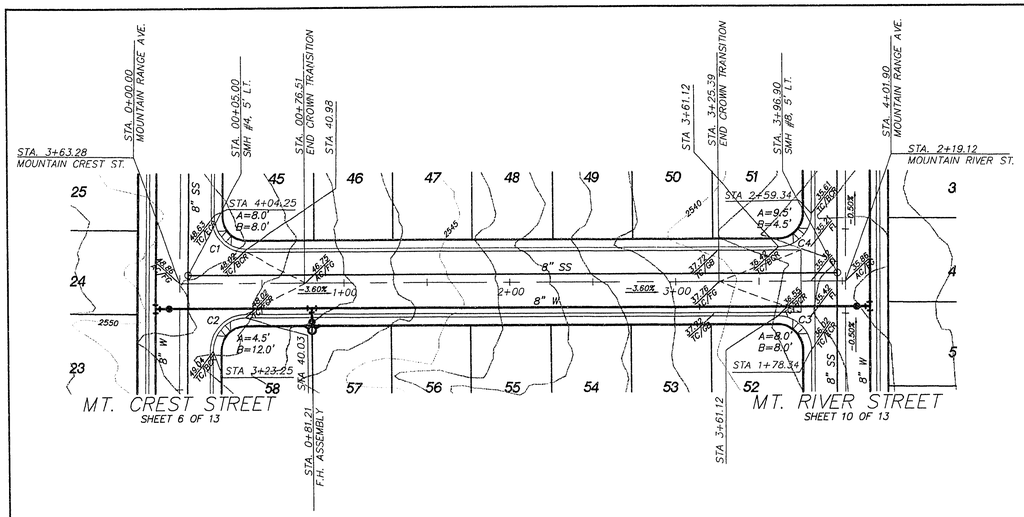

SCALE 1" = 40'

0 20 40 80

Avoid cutting underground utility lines. It's costly.

Call before you Dig

1-800-227-2600

UNDERGROUND SERVICE ALERT (USA)

MOUNTAIN RANGE AVENUE

HORIZONTAL 1" = 40'
VERTICAL 1" = 4'

CURVE DATA - BACK OF CURB

No.	RADIUS	LENGTH	TANGENT	DELTA
C1	20.00'	31.65'	20.24'	90°40'30"
C2	20.00'	31.18'	19.77'	89°19'30"
C3	20.00'	31.55'	20.14'	90°23'19"
C4	20.00'	31.28'	19.86'	89°36'41"

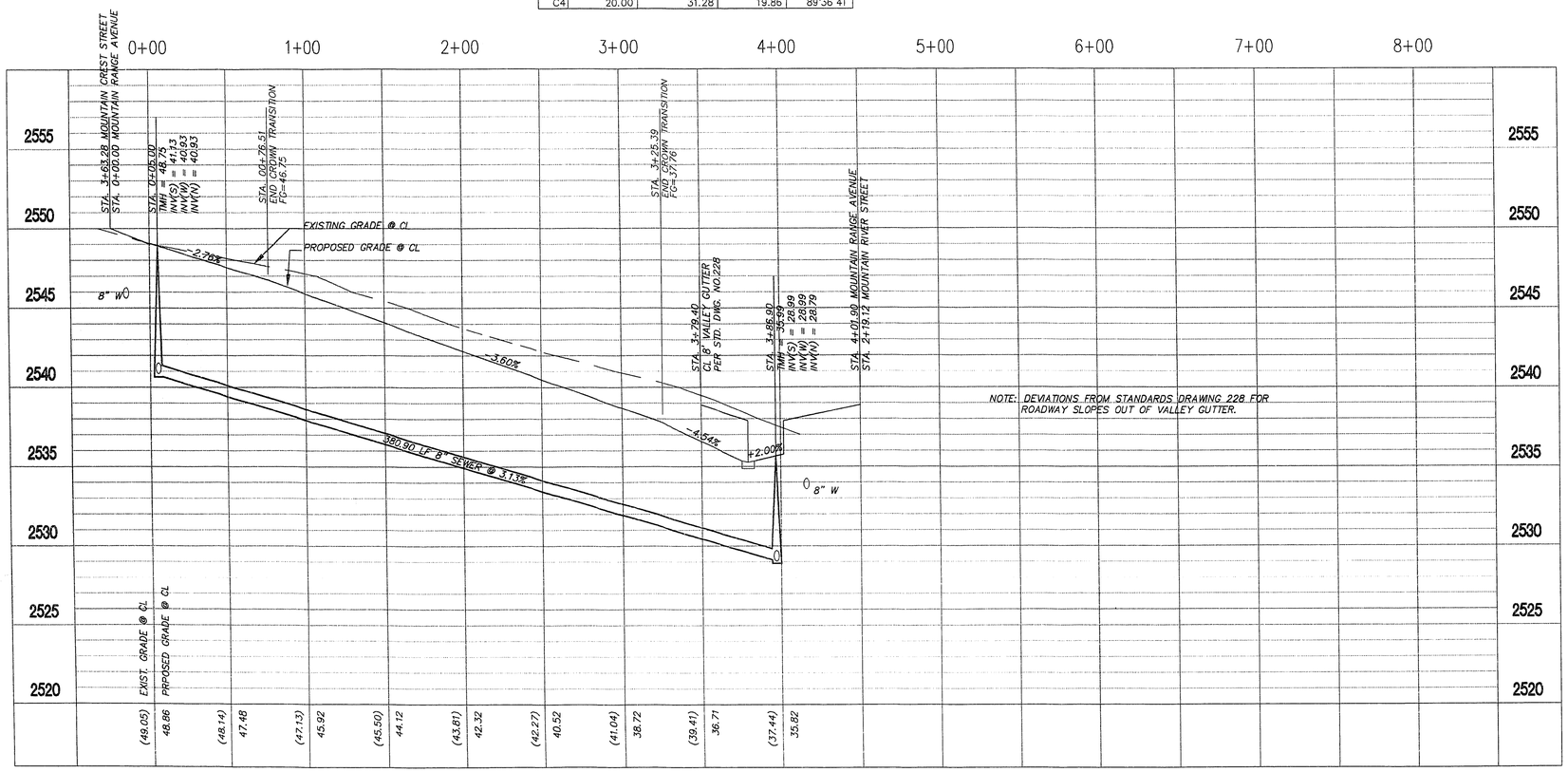

NOTE: DEVIATIONS FROM STANDARDS DRAWING 228 FOR ROADWAY SLOPES OUT OF VALLEY GUTTER.

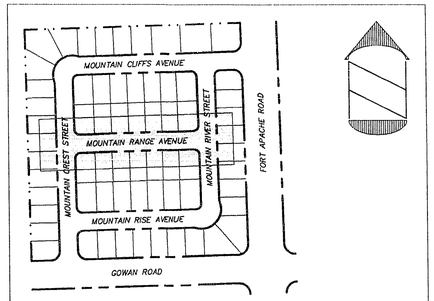

KEY MAP

NOT TO SCALE

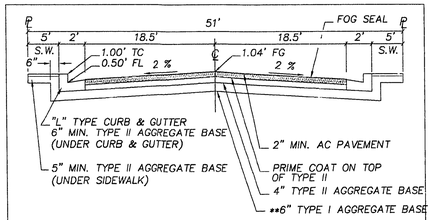

NOTE:
1. FINAL AC PAVEMENT SURFACE SHALL BE 1/2" MAX. ABOVE LIP OF GUTTER
2. STRUCTURAL SECTION SHOWN IS BASED ON A ANALYSIS OF EXISTING SOILS TO VERIFY SUBGRADE "R" VALUE IS A MINIMUM OF 20, OTHERWISE AN ALTERNATIVE SECTION WILL BE REQUIRED.

**NATIVE MATERIAL MAY BE USED IN LIEU OF TYPE I IF PROCESSED AND APPROVED IN ACCORDANCE WITH CLV.

51' STREET SECTION

NOT TO SCALE

CONSTRUCTION NOTES

1. CONSTRUCT 8' CONCRETE CROSS GUTTER PER CLARK COUNTY AREA STD. DWG. NO. 228
2. CONSTRUCT SIDEWALK RAMP (CASE I) PER CLARK COUNTY AREA STD. DWG. NO. 235 (TRANSITION LENGTHS A & B SHOWN ON PLAN Z=3.5")
3. CONSTRUCT 5' WIDE CONCRETE SIDEWALK PER CLARK COUNTY AREA STD. DWG. NO. 234 AND 216.
4. CONSTRUCT 24" "L" TYPE CURB & GUTTER PER CLARK COUNTY AREA STD. DWG. NO. 216.
5. ALL STATIONING IS CENTERLINE STATIONING UNLESS OTHERWISE NOTED.
6. SEWER LENGTHS ARE FROM CENTER OF MANHOLE TO CENTER OF MANHOLE
7. "K" STATIONING INDICATES KNUCKLE STATIONING AT BACK OF CURB.
8. BLOCK WALLS TO HAVE ACCEPTABLE CLEARANCES AROUND FIRE-HYDRANT ASSEMBLIES.

Number	Revisions	Date

MOUNTAIN VIEW ESTATES

PLAN AND PROFILE
MOUNTAIN RANGE AVENUE

REGISTERED PROFESSIONAL ENGINEER
PAUL J. KEUNDE
CIVIL
NO. 06669
NEVADA

Drawn by: JDL
Checked by: PJK
Scale: AS SHOWN
Date: MARCH 4, 1996
Drawing No. 94-0010

C:\ACAD\DWGS\TEMP\WV-PP3 Wed Mar 27 23:35:56 1996 POST: BUCKLEY, SCHUH, & JERNIGAN, INC. - SCOTT

11-26-9

107Y-4437-