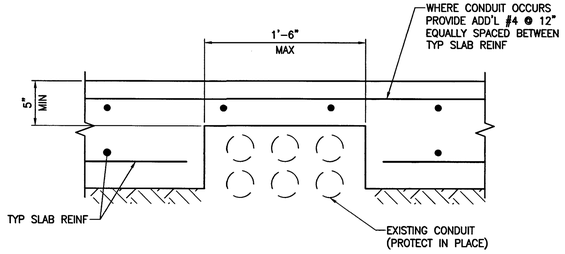

NOTE:
PROVIDE 1/2" EXPANSION MATERIAL BETWEEN CONDUIT AND CONCRETE.

6 DETAIL
SCALE: NTS

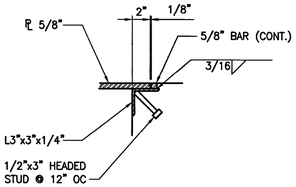

3 DETAIL
SCALE: 1 1/2" = 1'-0"

NOTES

1. REFER TO GENERAL STRUCTURAL NOTES ON SHEET PP-17.

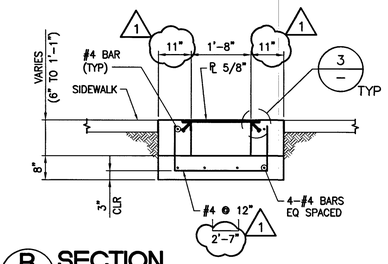

B SECTION
SCALE: 1/2" = 1'-0"

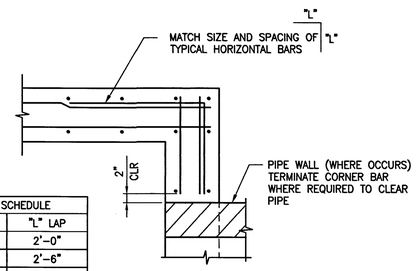

BAR SCHEDULE	
BAR SIZE	"L" LAP
#4	2'-0"
#5	2'-6"
#6	3'-6"

5 TYP CORNER REINF DETAIL
SCALE: NTS

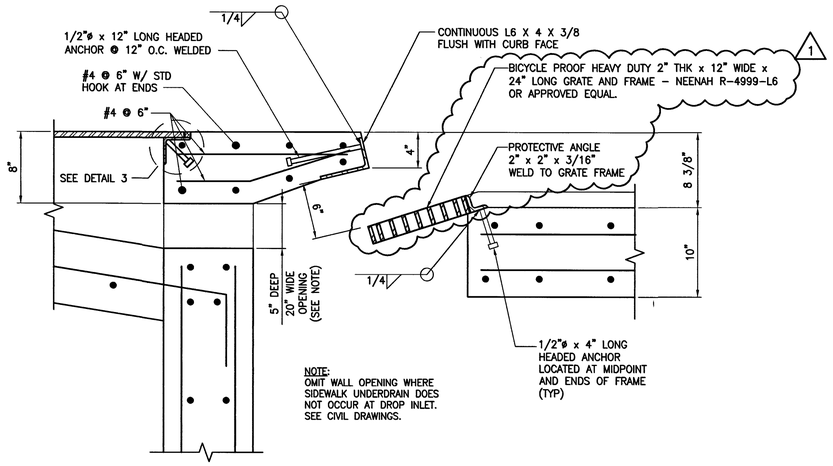

NOTE:
OMIT WALL OPENING WHERE SIDEWALK UNDERDRAIN DOES NOT OCCUR AT DROP INLET. SEE CIVIL DRAWINGS.

2 DETAIL
SCALE: 1 1/2" = 1'-0"

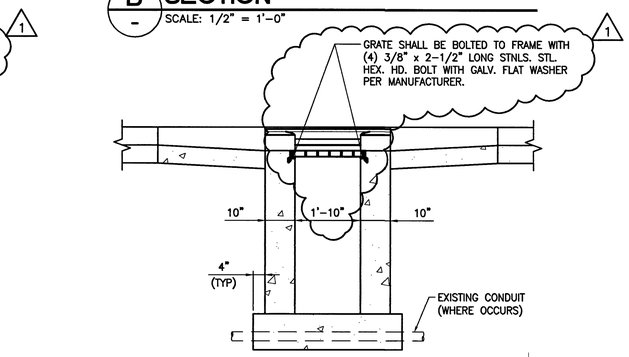

A SECTION
SCALE: 1/2" = 1'-0"

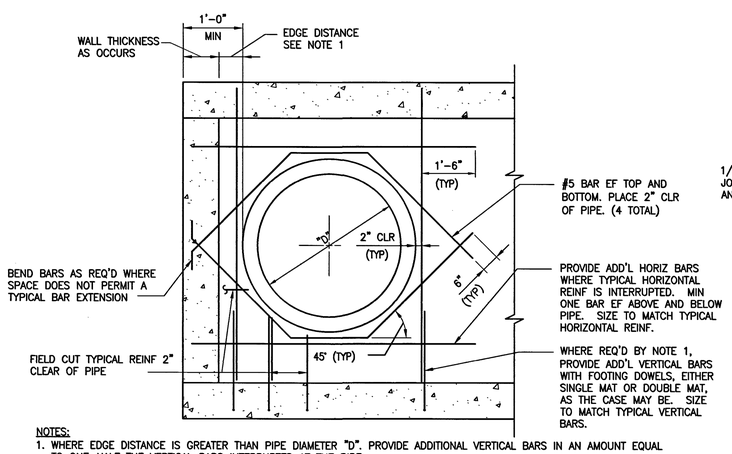

NOTES:
1. WHERE EDGE DISTANCE IS GREATER THAN PIPE DIAMETER "D", PROVIDE ADDITIONAL VERTICAL BARS IN AN AMOUNT EQUAL TO ONE-HALF THE VERTICAL BARS INTERRUPTED AT THE PIPE.
2. FIELD CUT TYPICAL WALL REINFORCING 2" CLR OF PIPE.
3. WHEN WALL IS LESS THAN 9" THICK REINFORCING DOES NOT NEED TO BE PLACED IN EACH FACE AS STATED ABOVE.
4. IF BARS CANNOT EXTEND BEYOND PIPE AS SHOWN, EXTEND AS FAR AS POSSIBLE AND PROVIDE STANDARD HOOK.
5. WHERE PENETRATION OCCURS IN PRECAST MEMBER, THE PRECAST MANUFACTURER SHALL VERIFY THE ADEQUACY OF THIS DETAIL. PRECAST MANUFACTURER MAY SUBMIT ALTERNATE DETAIL FOR ENGINEER APPROVAL.

4 TYP PIPE PENETRATION DETAIL
SCALE: NTS

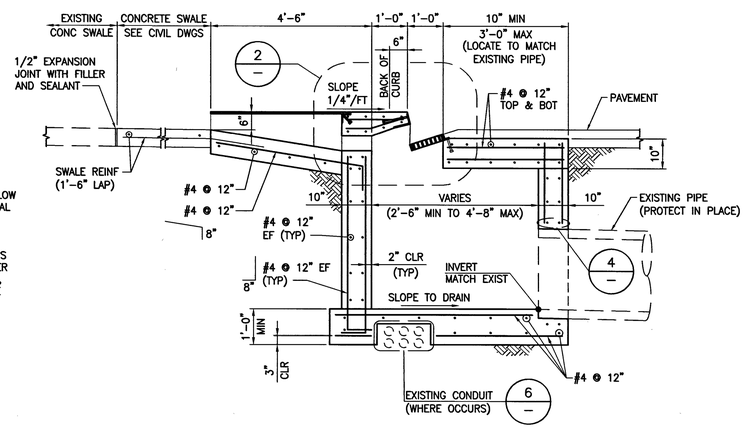

C SECTION
SCALE: 1/2" = 1'-0"

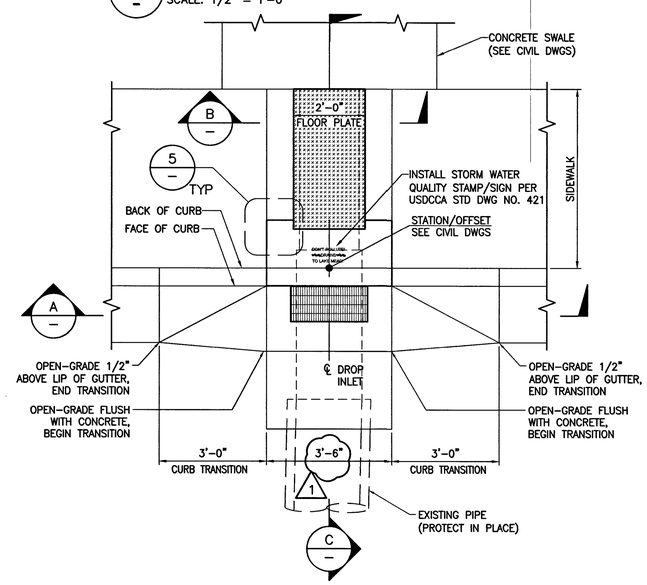

1 PLAN - DROP INLET
SCALE: 1/2" = 1'-0"

NO.	DATE:	DESCRIPTION	APP'D
1	12/21/11	REVISE GRATE TYPE AND SIZE	

REVISIONS

JONES BOULEVARD – SAHARA AVENUE TO US 95

DEPARTMENT OF PUBLIC WORKS
CAPITAL PROJECT MANAGEMENT

CITY ENGINEER: DAVID BOWERS, PE, PTOE
PROGRAM MANAGER: JEREMY LEAVITT, P.E.
DESIGNED BY: DAT
DRAWN BY: DAT
CHECKED BY: EGG
DATE: 4/18/11

TITLE: JONES BOULEVARD IMPROVEMENTS SAHARA AVENUE TO US 95

SHEET: DROP INLET DETAILS

SEAL
DAVID A. TURNER
Exp. 06/30/2012
CIVIL
No. 18979

Sheet
SD-04
60 of 101
DRAWING NO.
107-V5627

HANSEN NO. 38800 BID NO. 11.17.20.05