734-4

AREA	STATE	RESERVATION	ROUTE NO.	PROJECT NO.	SHEET NO.	NO. SHEETS
PHOENIX	NEVADA	LAS VEGAS	1	1	11	19

REDUCED PRINT
SCALE ACCORDINGLY

STORM DRAIN
IMPACT STILLING BASIN
REINFORCING BAR LAYOUT

NOTES:
All Reinforcing shall be #4 Bars 1'-0" C to C.
Bar Spacing may be expanded from 1'-0" to 1'-3" Max. to obtain even bar spacing.
Concrete shall be Class "A".

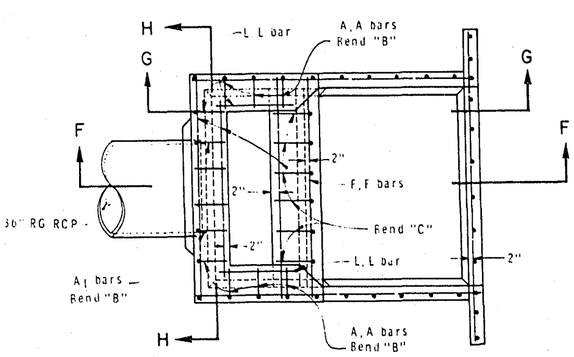

PLAN VIEW

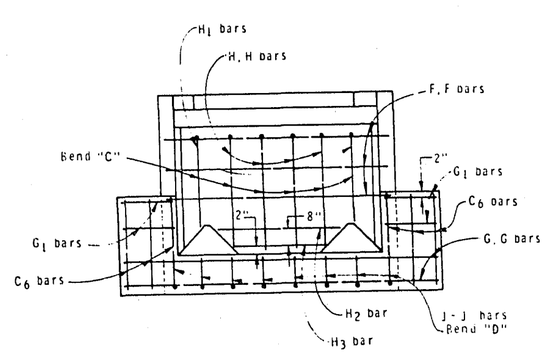

FRONT VIEW

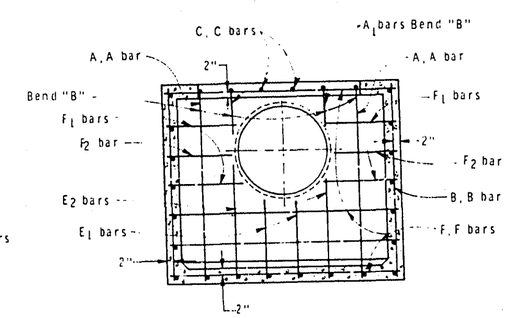

SECTION H-H

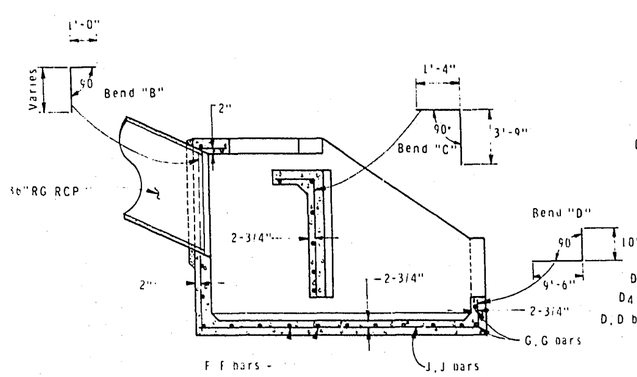

SECTION F-F

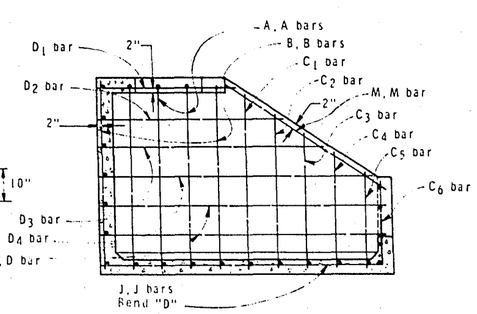

SECTION G-G

QUANTITIES

Concrete	Reinf. Steel
5.13 C.Y.	390 Lbs.

STEEL LIST

Mark	No.	Size	Length	Bend
A, A	8	#4	7'-3"	"B"
A_1	2	#4	2'-6"	"B"
B, B	4	#4	6' 3"	Str.
C, C	2	#4	1'-0"	Str.
C_1	2	#4	6'-0"	Str.
C_2	2	#4	5'-3"	Str.
C_3	2	#4	4'-6"	Str.
C_4	2	#4	4'-0"	Str.
C_5	2	#4	3'-3"	Str.
C_6	6	#4	2'-9"	Str.
D, D	4	#4	9'-9"	Str.
D_1	2	#4	4'-9"	Str.
D_2	2	#4	6'-3"	Str.
D_3	2	#4	7'-9"	Str.
D_4	2	#4	9'-3"	Str.
E_1	2	#4	2'-9"	Str.
E_2	2	#4	3'-9"	Str.
F, F	20	#4	7'-6"	Str.
F_1	4	#4	2'-6"	Str.
F_2	2	#4	2'-3"	Str.
G, G	2	#4	10'-6"	Str.
G_1	4	#4	1'-9"	Str.
H, H	4	#4	5'-0"	"C"
H_1	2	#4	4'-3"	"C"
H_2	1	#4	4'-3"	Str.
H_3	1	#4	3'-0"	Str.
J, J	8	#4	10'-6"	"D"
L, L	2	#4	2'-9"	Str.
M, M	2	#4	6'-6"	Str.

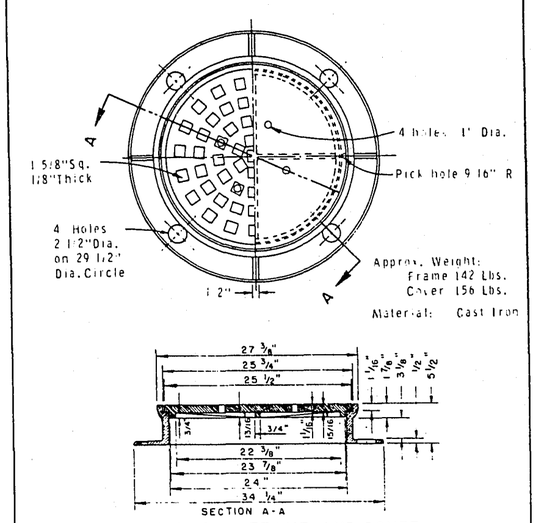

MANHOLE FRAME AND COVER