NOTE 1:
PRECAST CONCRETE PLUG MAYBE USED IN LIEU OF BRICK & MORTAR PLUG.

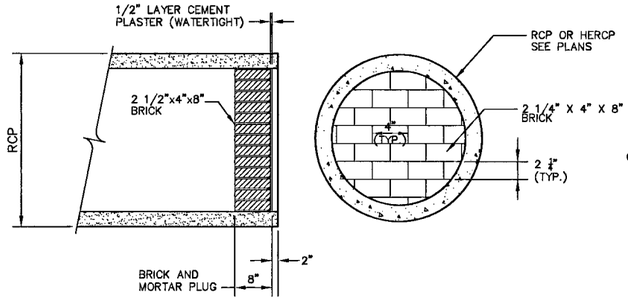

BRICK AND MORTAR RCP END PLUG DETAIL
NO SCALE

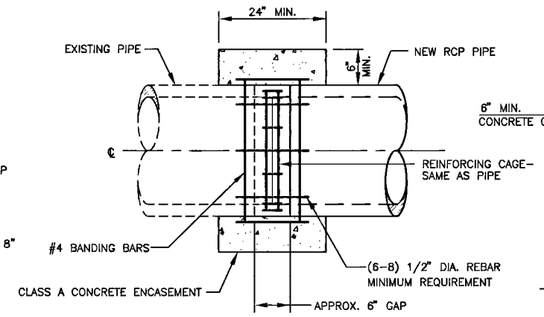

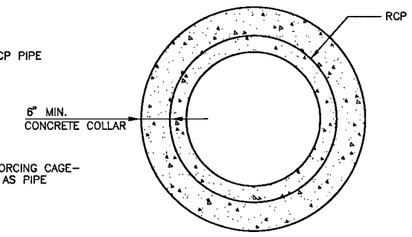

NOTE:
IF EXISTING PIPE BELL IS UNDAMAGED, USE STANDARD CONNECTION.

SEE SHEET SD7 FOR LOCATION OF CONNECTION (CONSTRUCTION NOTES 7.6 & 7.10

TYPICAL RCP STRAIGHT CONNECTION COLLAR DETAIL
NO SCALE

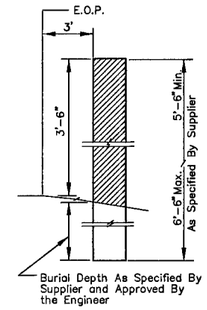

NOTE:
GUIDEPOST REFLECTOR COLOR SHALL CONFORM TO THE COLOR OF ADJACENT STRIPED EDGE LINE.

FLEXIBLE GUIDE POST
NO SCALE

AVOID OVERHEAD POWER LINE CONTACT
IT'S COSTLY
Call before you Overhead
1-702-227-2929
NV ENERGY ENVIRONMENT AND SAFETY SERVICES DEPARTMENT

Call before you Dig
Avoid cutting underground utility lines, it's costly.
Call 811

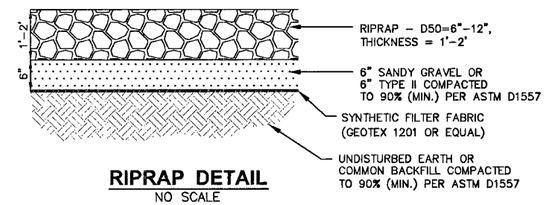

RIPRAP DETAIL
NO SCALE

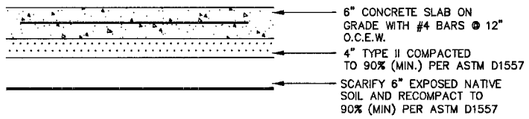

2 MAINTENANCE ROAD DETAIL
NO SCALE

INLET 4.16 TRIM 1.5'x1.5' OF NORTHEAST CORNER OF APRON

INLET 4.18 TRIM 1.4' OF EASTSIDE OF APRON

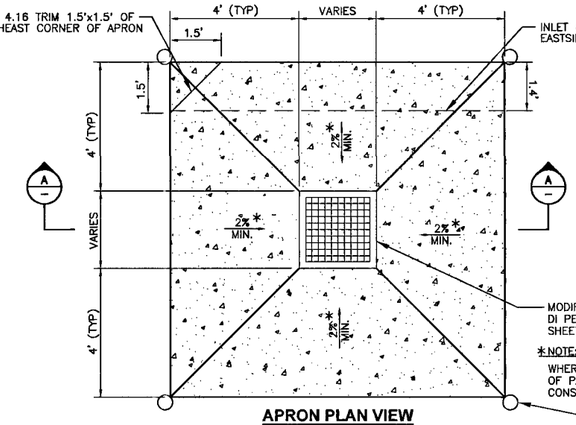

PAINT NOTE:
ALL PAINTS SHALL BE HIGH–GLOSS ENAMEL. CONTRACTOR SHALL SUBMIT PAINT DATA SHEET FOR REVIEW & APPROVAL PRIOR TO APPLICATION. PAINTING SHALL CONFORM TO SECTION 614 OF THE "UNIFORM STD SPECIFICATIONS FOR PUBLIC WORK'S CONSTRUCTION OFF–SITE IMPROVEMENTS, CLARK COUNTY AREA, NEVADA ("LATEST EDITION")

- APRON SHALL BE PAINTED YELLOW.

*NOTE:
WHERE CONCRETE APRON ABUTS ROADWAY EDGE OF PAVEMENT, THE CONCRETE APRON MUST BE CONSTRUCTED AT A MAXIMUM SLOPE OF 10:1

APRON PLAN VIEW

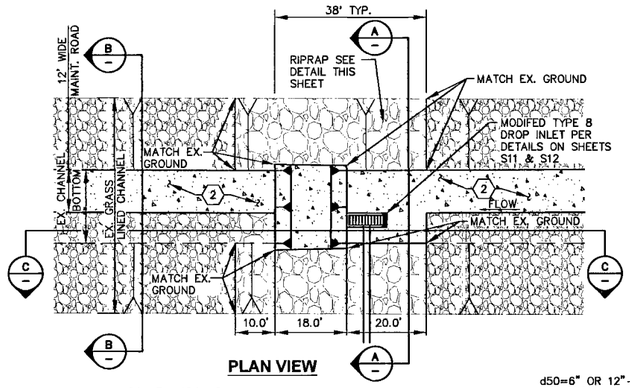

PLAN VIEW

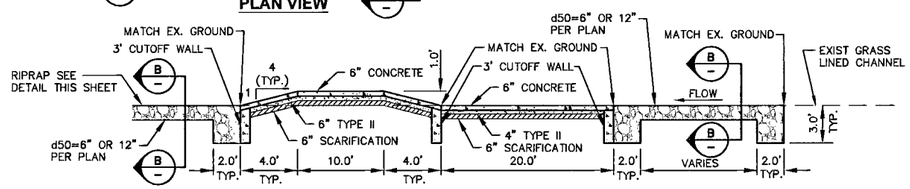

PROFILE VIEW
SECTION C-C

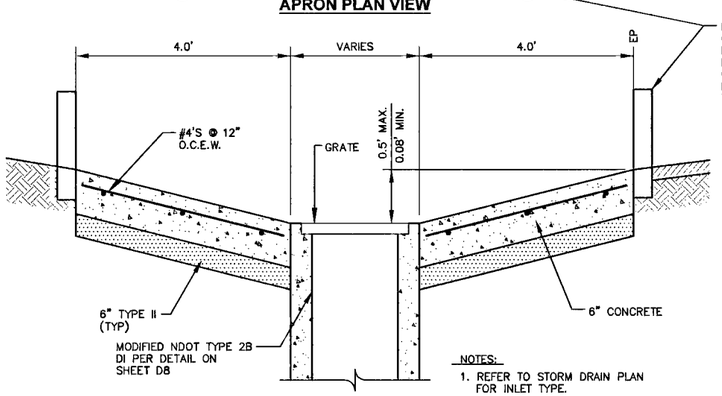

NDOT FLEXIBLE GUIDE POSTS INSTALLED AT EACH CORNER OF CONCRETE APRON PER DETAIL ON THIS SHEET

NOTES:
1. REFER TO STORM DRAIN PLAN FOR INLET TYPE.
2. REFER TO SHEET D5 FOR CONCRETE APRON SCHEDULE.

SECTION A-A

MODIFIED NDOT TYPE 2B DROP INLET W/ CONCRETE APRON DETAIL
NO SCALE

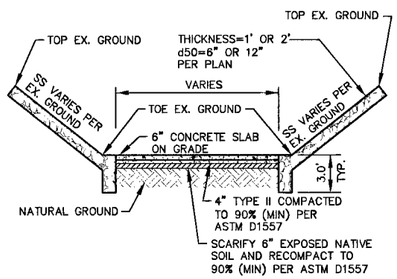

PROFILE VIEW
SECTION A-A

BERM DETAIL
NO SCALE

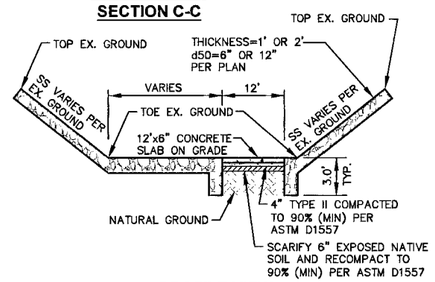

PROFILE VIEW
SECTION B-B

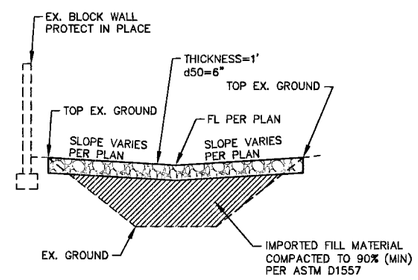

PROFILE VIEW
SECTION D-D

H#23161

PUBLIC WORKS DEPARTMENT
400 E. STEWART AVE.
LAS VEGAS, NV 89101
702-229-6272

2727 SOUTH RAINBOW BOULEVARD
LAS VEGAS, NEVADA 89146-5148
PH. (702) 873-7550
FAX (702) 362-2597
WEB SITE WWW.VTRNV.COM

REV	DATE	BY	REVISION

MISCELLANEOUS DETAILS

LAS VEGAS WASH - MIDDLE BRANCH
RAINBOW STORM DRAIN
ELKHORN TO GRAND TETON

DRAWN BY: KAS	JUNE 15, 2009		
DESIGNED BY: DAB	JUNE 15, 2009		
CHECKED BY: KDG/TMA/DAN	JUNE 15, 2009	SCALE	HORIZ. N/A VERT. N/A
PROJECT NO: 6952			

REGISTERED PROFESSIONAL ENGINEER STATE OF NEVADA KEN D. GILBRETH EXP. 06/30/09 CIVIL No. 9177 6-16-09

SHEET D4
31 OF 70 SHEETS
DRAWING NO. 731-87-1

T:\SDC\Dwg\Details\misc details.dwg\ortiz, Jun 15, 2009 - 12:19pm

118601