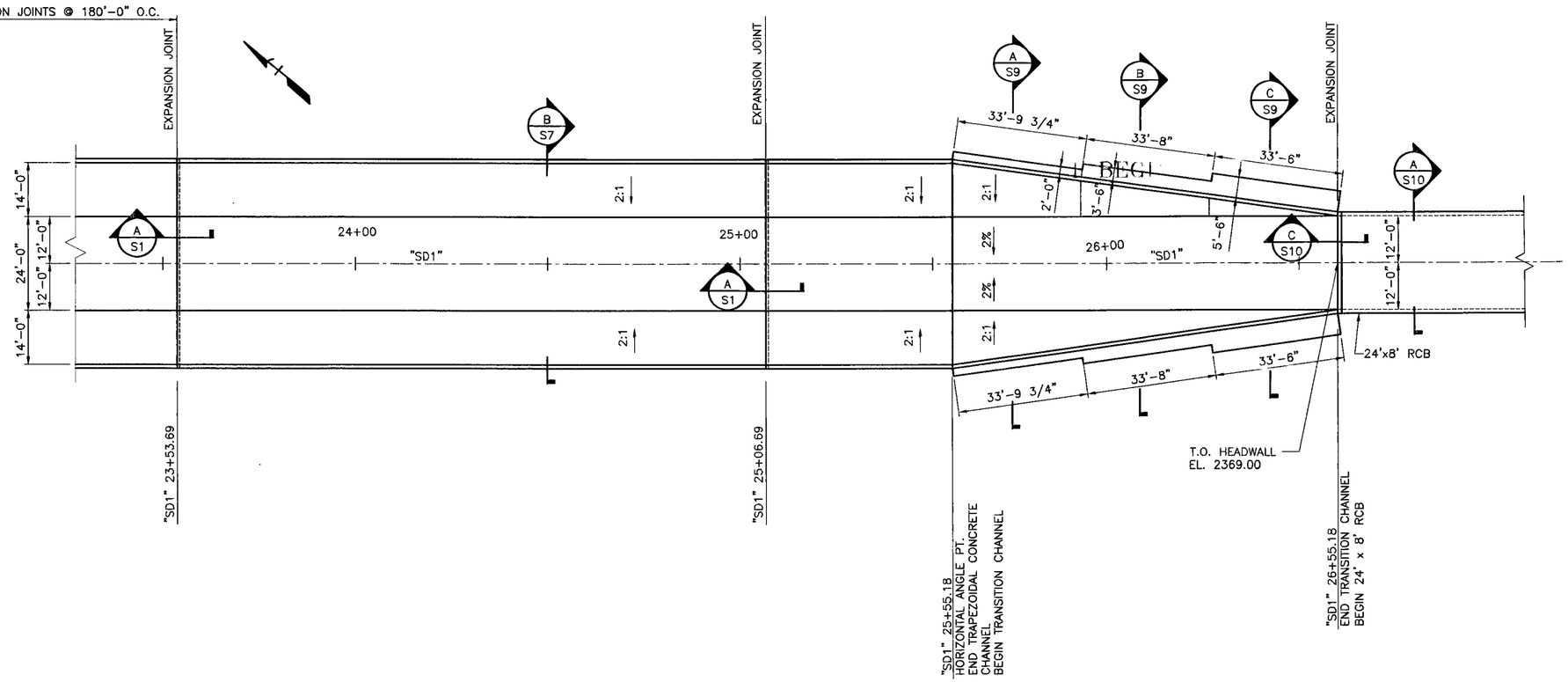

PARTIAL CHANNEL PLAN (1/S5)

SCALE: 1/16"=1'-0"

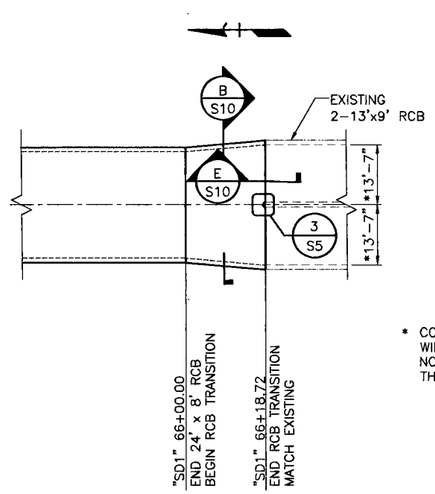

* CONTRACTOR TO FIELD VERIFY WIDTH OF EXISTING RCB AND NOTIFY IF WIDTH IS GREATER THAN DIMENSIONS SHOWN.

PARTIAL CHANNEL PLAN (2/S5)

SCALE: 1/16"=1'-0"

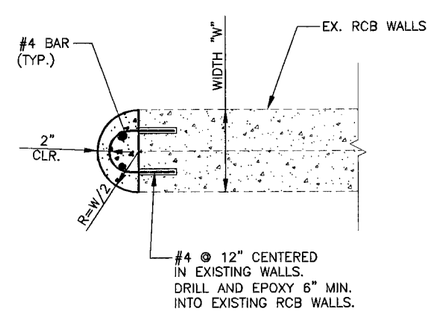

BULL NOSE DETAIL (3/S5)

SCALE: 1"=1'-0"

H#23161

118611

REV	DATE	BY	REVISION

PUBLIC WORKS DEPARTMENT
400 E. STEWART AVE.
LAS VEGAS, NV 89101
702-229-6272

R&H ENGINEERING, INC.
CONSULTING STRUCTURAL ENGINEERS
840 GRIER DRIVE, SUITE 100 • LAS VEGAS, NEVADA • 89119
PHONE: (702) 260-1000 FAX: (702) 260-1010

PARTIAL CHANNEL PLAN
"SD1" 23+00.00 TO "SD1" 66+50.00

LAS VEGAS WASH - MIDDLE BRANCH
RAINBOW STORM DRAIN
ELKHORN TO GRAND TETON

DRAWN BY: ELT 1/14/09
DESIGNED BY: DMS 1/14/09
CHECKED BY: DAA 1/14/09
PROJECT NO:
SCALE: HORIZ. VERT.

PROFESSIONAL ENGINEER — STATE OF NEVADA — DANA A. AMES — EXP. 12/31/10 — CIVIL/STRUCTURAL — No. 10712 — 5-27-10

SHEET
S5
41 OF 70 SHEETS
DRAWING NO.
731-87-1

P:\0800\0034-CWF\0800S3-R06.DWG