13-13-121

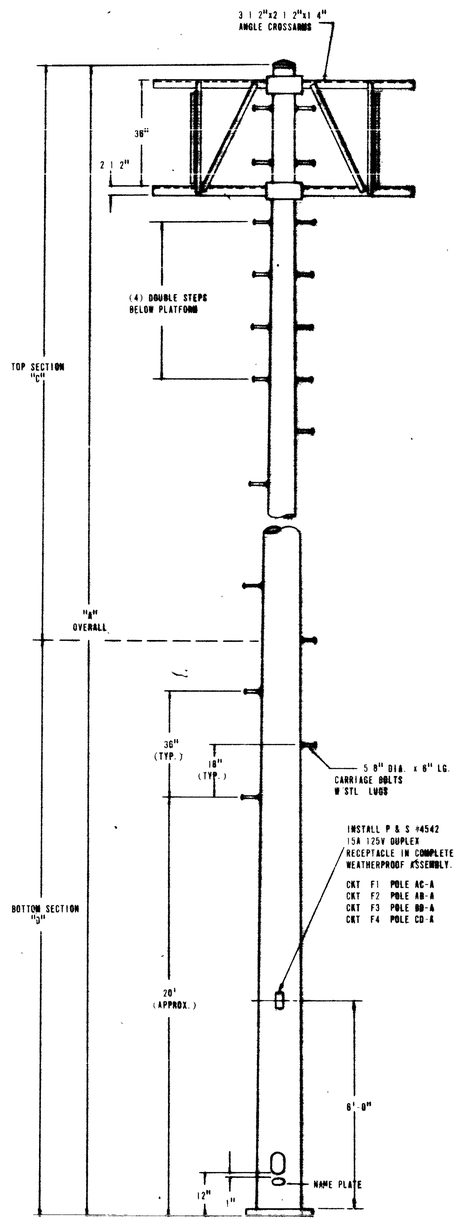

FLOOD LIGHTING POLE ELEVATION

NO SCALE

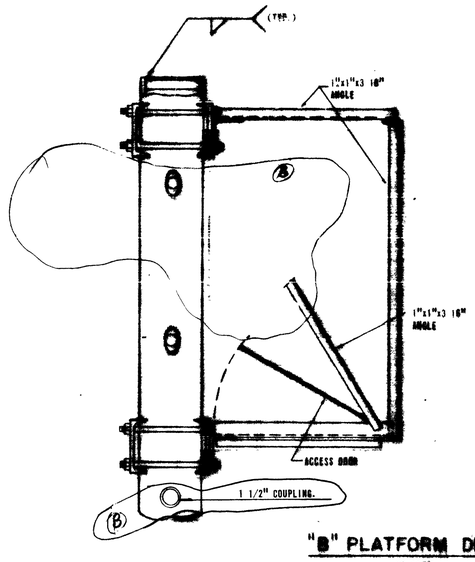

"B" PLATFORM DETAIL

NO SCALE

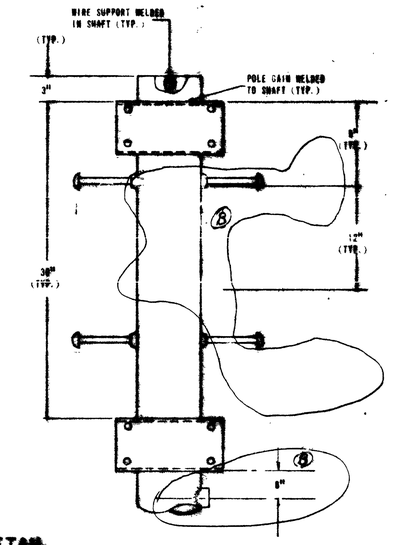

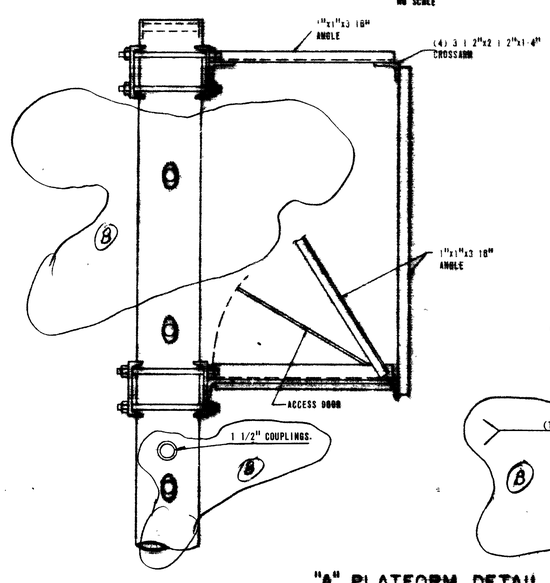

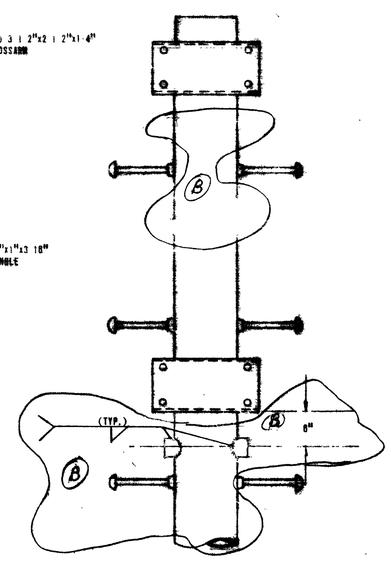

"A" PLATFORM DETAIL

NO SCALE

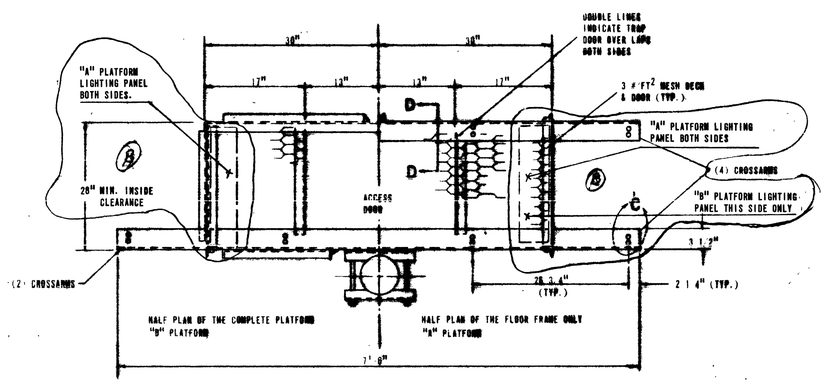

PLAN OF PLATFORM

NO SCALE

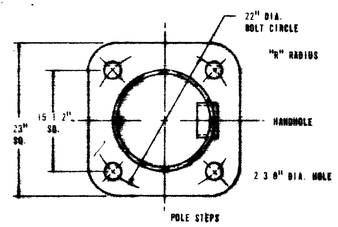

POLE STEPS

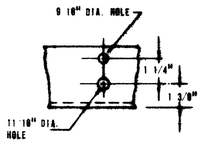

DETAIL "C"

NO SCALE

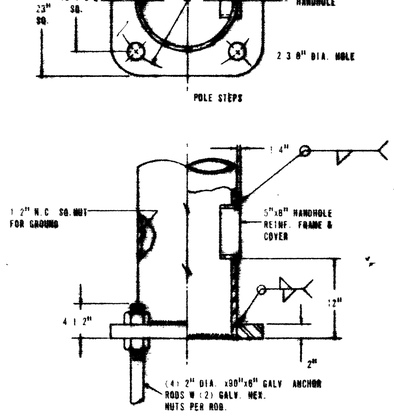

POLE BASE DETAIL

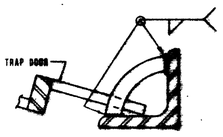

SECTION 'D-D'

NO SCALE

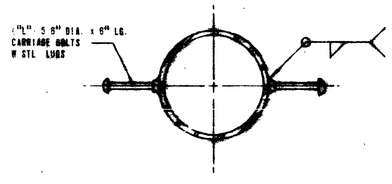

POLE STEP DETAIL

NO SCALE

POLE SCHEDULE

PLATFORM DESIGN	"H" OVERALL	SECTION "B"	SECTION "C"	FLOODLIGHT ARRANGEMENT	POLES	NUMBER REQUIRED
"A"	50'	C38A 15.27"x10.88"x31'-6"	C7GA.11 43"x8.63"x20'-0"	SEE DWG. E5	INFIELD POLES	8
"B"	55'	C38A 15.27"x10.85"x31'-6"	C7GA.11 43"x7.93"x25'-0"	SEE DWG. E5	OUTFIELD POLES	18

REVISION	BY	DATE
3 CHANGED DIMENSION, RELOCATED LIGHTING PANELS.		6/4/70
2 REMOVED BRACKETS AND COUPLINGS.		6-3-70

CONTRACT DRAWING

MAY 15 1970

NEV. OSD-7

APPROVED

DATE

RT	DIV		DATE
4	D.P.W.		5/12/70
3	SERV.		5/12
2	FIELD		5/12
	R/W		
	TRAFF		
	UTIL		
	SUBD		
	SAD		
1	ENGR.		

JOSEPH P. GIDWALL
CONSULTING ENGINEERS
3106 INDUSTRIAL ROAD
LAS VEGAS NEVADA 89102

CITY OF LAS VEGAS NEVADA
DEPARTMENT OF PUBLIC WORKS
SERVICES DIVISION

LORENZI PARK POWER & LIGHTING
FLOOD LIGHTING POLE DETAILS

		DATE	DRAWING NO.
DR. G. MO	CHK. HB		E9
DES.	T.	4-13-70	FILE NO.
DR.	G. PEREZ		650.19-13
APPROVED BY DIRECTOR OF PUBLIC WORKS			SHEET 9 OF 9

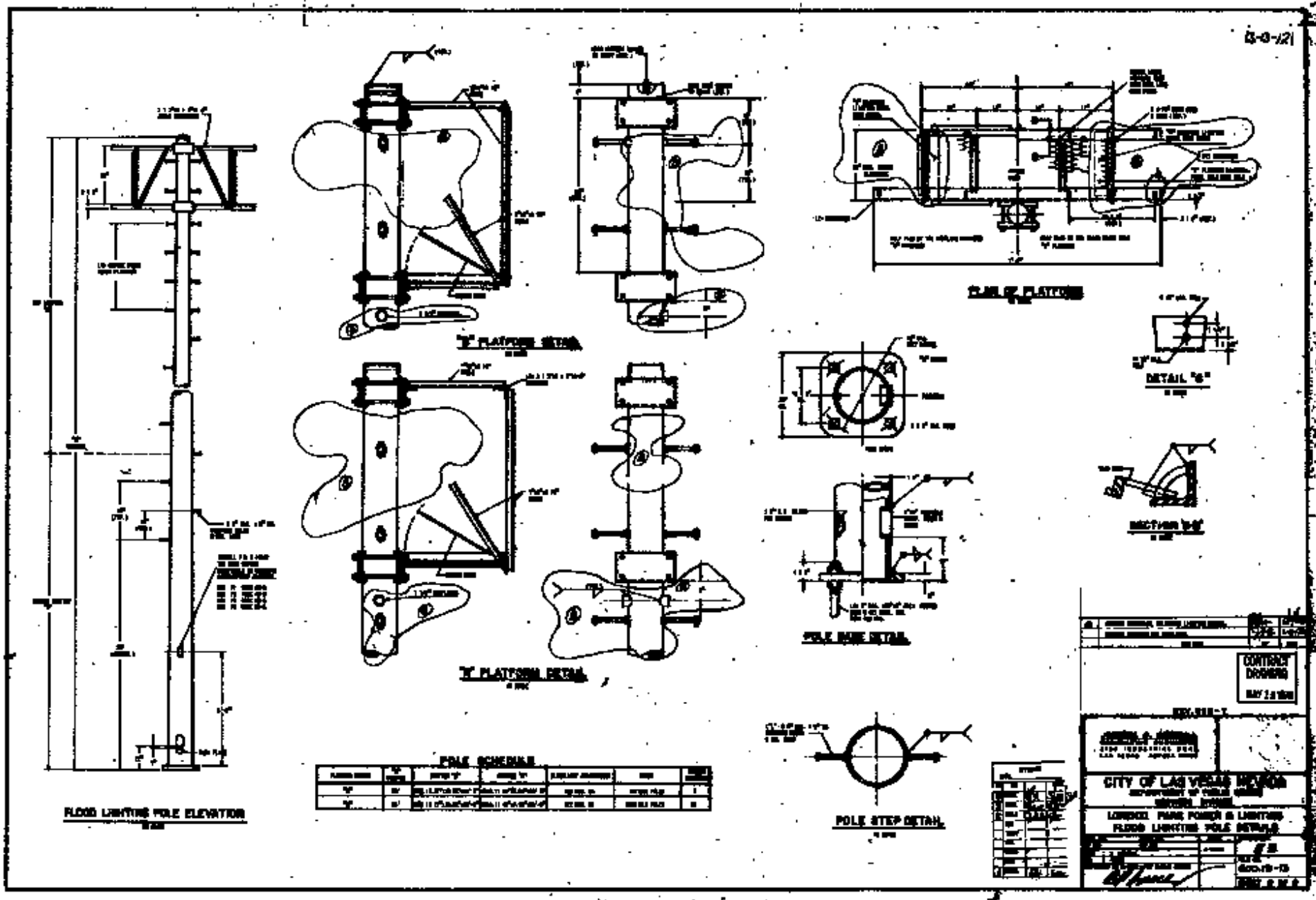
FLOOD LIGHTING POLE ELEVATION
"B" PLATFORM DETAIL
"A" PLATFORM DETAIL
PLAN OF PLATFORM
DETAIL "B"
SECTION "B-B"
POLE BASE DETAIL
POLE STEP DETAIL
POLE SCHEDULE
CONTRACT DRAWING
CITY OF LAS VEGAS NEVADA
LONGEST PARK POWER & LIGHTING
FLOOD LIGHTING POLE DETAILS