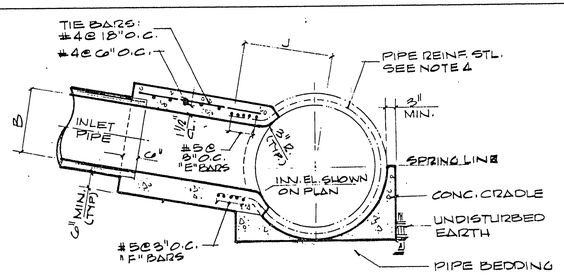

SECTION

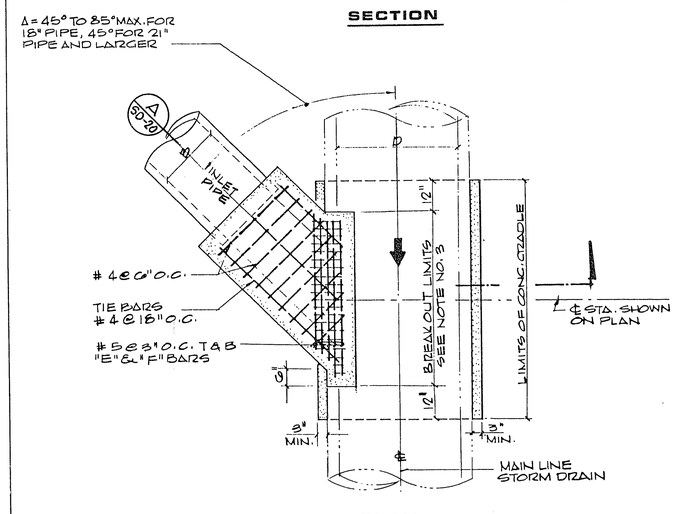

PLAN

NOTE:
JUNCTION IS TO BE USED WHEN O.D. OF B IS GREATER THAN 1/2 THE I.D. OF "D" OR B IS GREATER 24". B SHALL NOT EXCEED 3/4 D, OR 30", NO MORE THAN ONE OPENING SHALL BE MADE IN ONE SECTION OF PIPE.

PIPE TO PIPE CONNECTION
N.T.S.
H / I-15

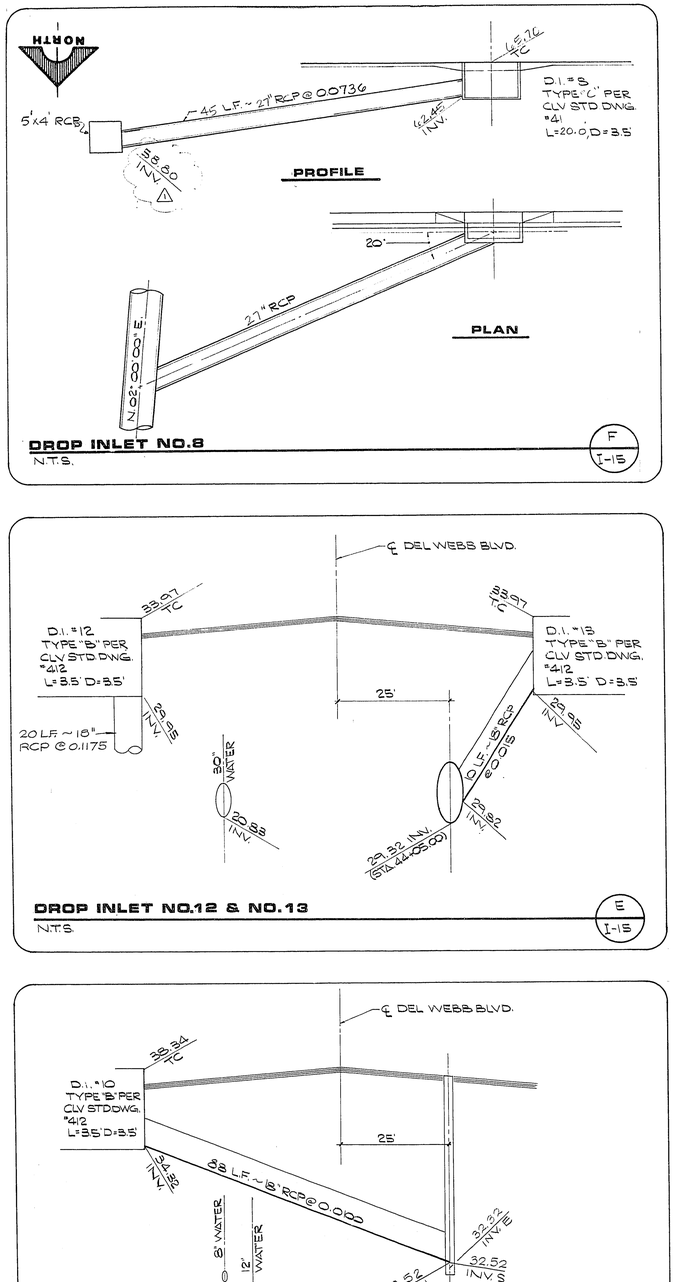

DROP INLET NO.8
N.T.S.
F / I-15

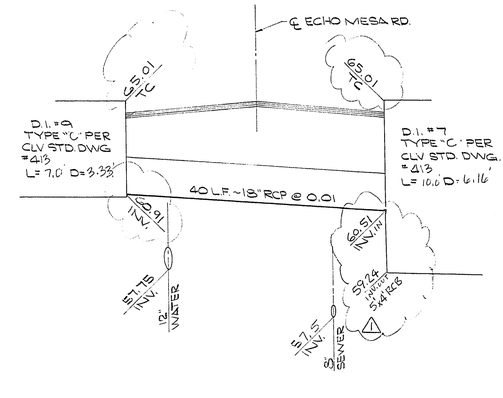

DROP INLET NO.9 & NO. 7
N.T.S.
C / I-15

DROP INLET NO.12 & NO.13
N.T.S.
E / I-15

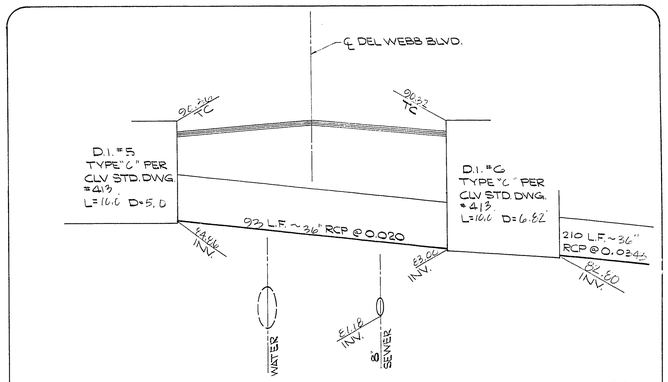

DROP INLET NO.5 & NO.6
N.T.S.
B / I-15

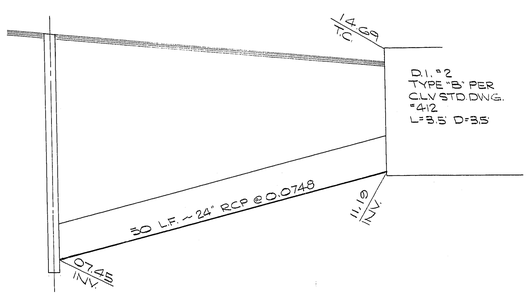

DROP INLET NO. 2
N.T.S.
G / I-15

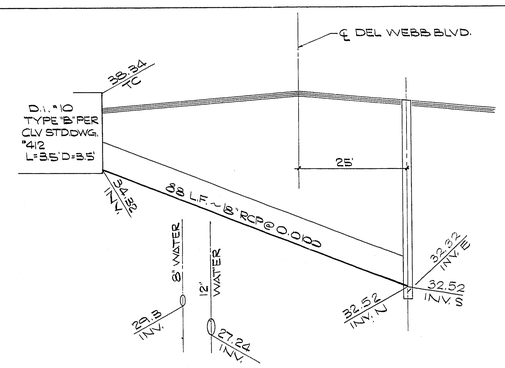

DROP INLET NO.10
N.T.S.
D / I-15

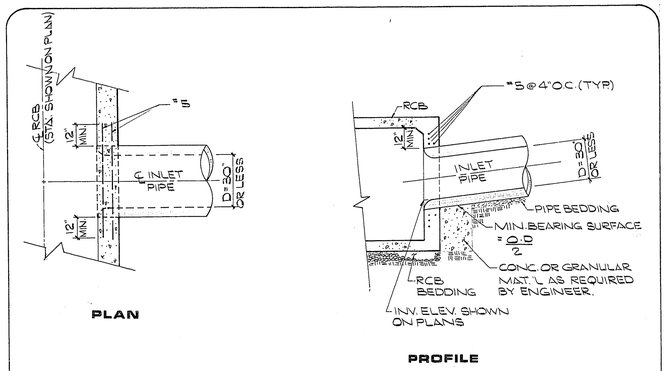

PIPE TO R.C.B. CONNECTION
N.T.S.
A / I-15

REV	DATE	DESCRIPTION
1	7/8/96	REVISED INV. 5x4' RCB INLET

RECOMMENDED
R.E. NO. DATE

G.C. WALLACE, INC.
Engineering/Architecture
1555 SOUTH RAINBOW BLVD. / LAS VEGAS, NEVADA 89102

DEL WEBB COMMUNITIES, INC.
SUN CITY SUMMERLIN
DEL WEBB BLVD.
MISC. STORM DRAIN DETAILS

SHEET 17
I-15
OF 23 SHEETS

JOB NO. 701.013

8/84 DIETERICH-POST 65328

9-9-124 3247-4003