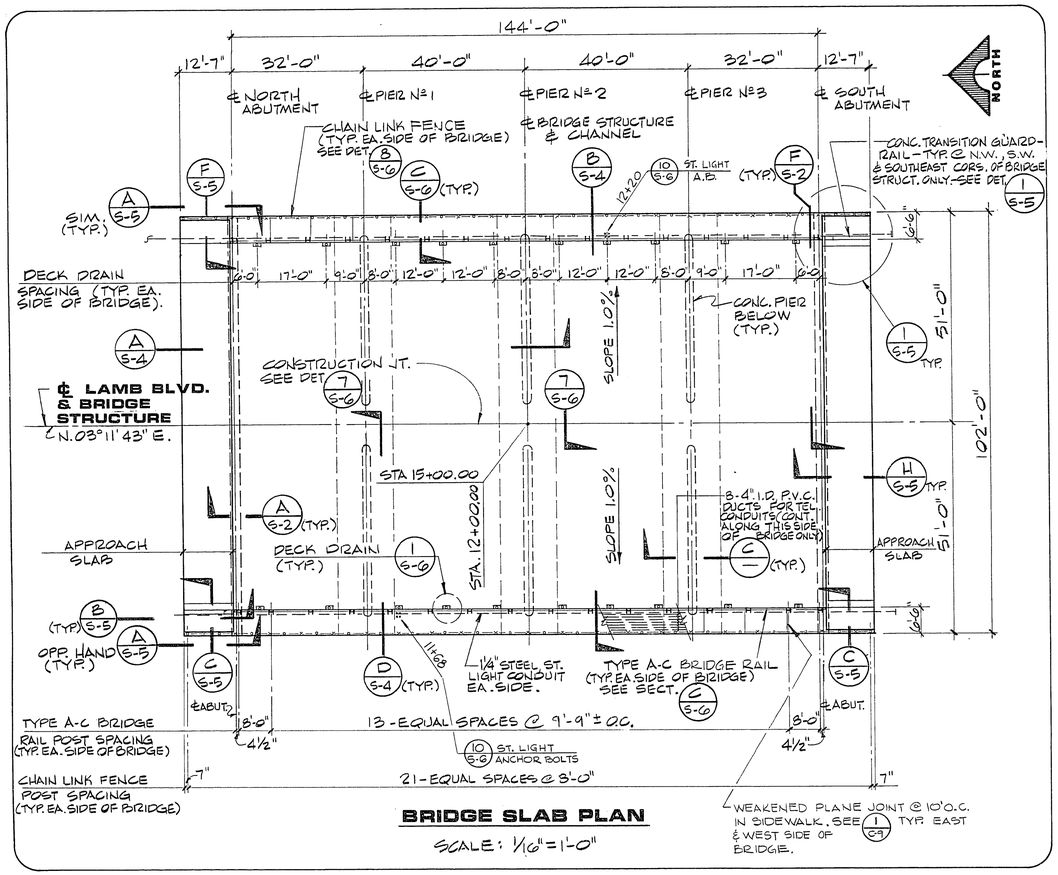

BRIDGE SLAB PLAN

SCALE: 1/16" = 1'-0"

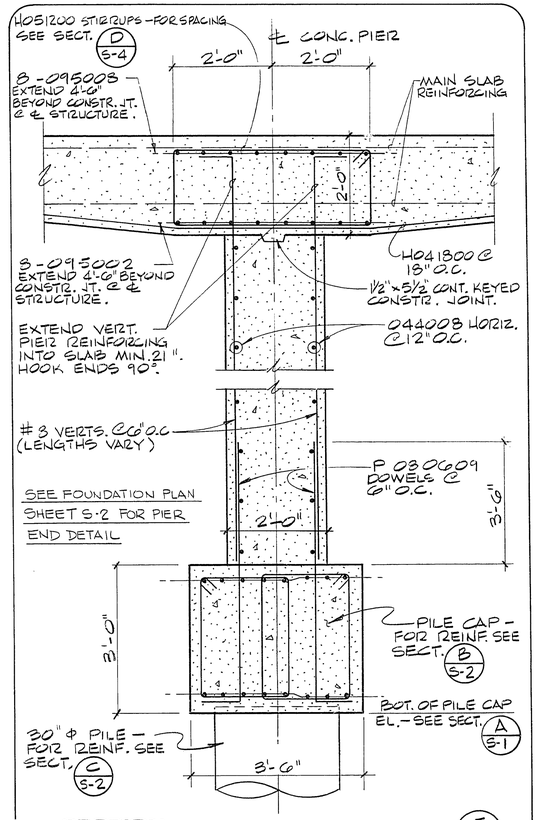

SECTION

SCALE: 3/4" = 1'-0"

C S-3

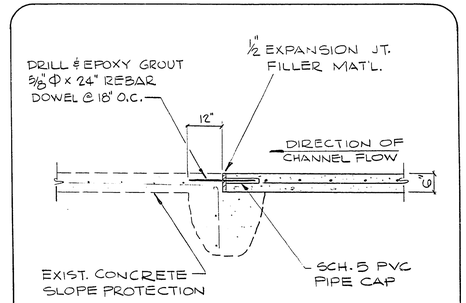

SECTION

SCALE: 1/2" = 1'-0"

D S-3

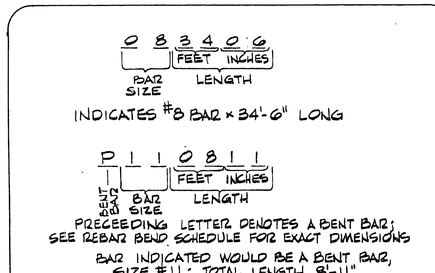

REBAR DESIGNATION

SECTION

SCALE: 1/2" = 1'-0"

A S-3

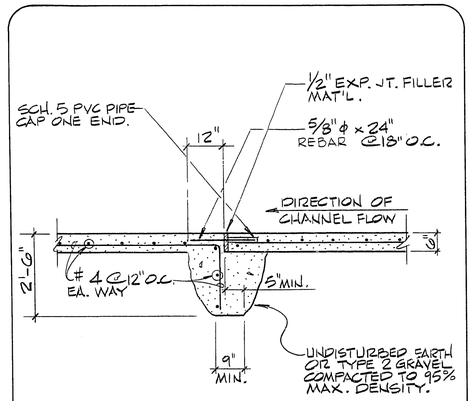

SECTION

SCALE: 1/2" = 1'-0"

B S-3

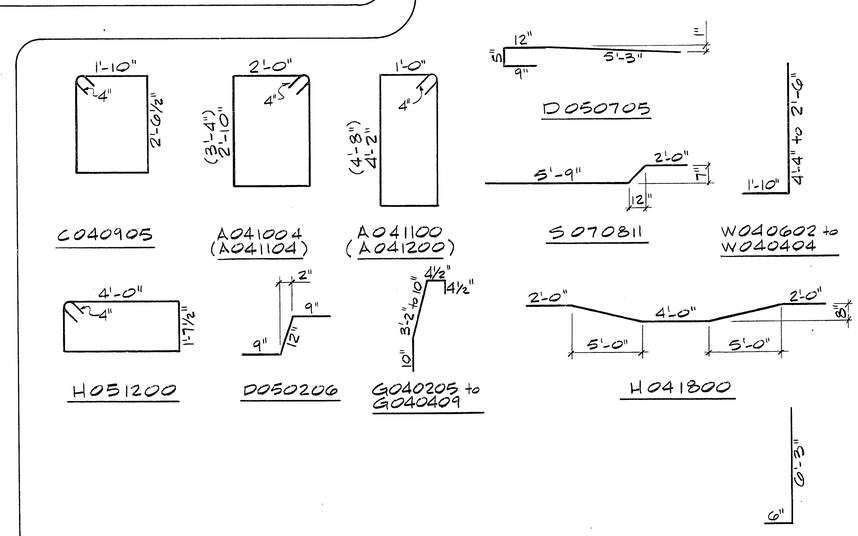

REBAR BEND SCHEDULE

NO SCALE

107-V1363

JOB NO. 412.222

8/84 DIETERICH-POST 6532B

REV	DATE	DESCRIPTION

R.E. NO. 3345 DATE 10/17/86

REGISTERED PROFESSIONAL ENG. JAMES E. MORRIS 6104 NEVADA, U.S.A.

G. C. WALLACE Consulting Engineers, Inc.
1555 South Rainbow Blvd. • Las Vegas, Nevada 89102 • 363-1200

CITY OF LAS VEGAS DEPT. OF PUBLIC WORKS
LAMB BLVD. / LAS VEGAS WASH BRIDGE
BRIDGE SLAB PLAN & SECTIONS

SHEET S-3 OF 17 SHEETS

2-3-136