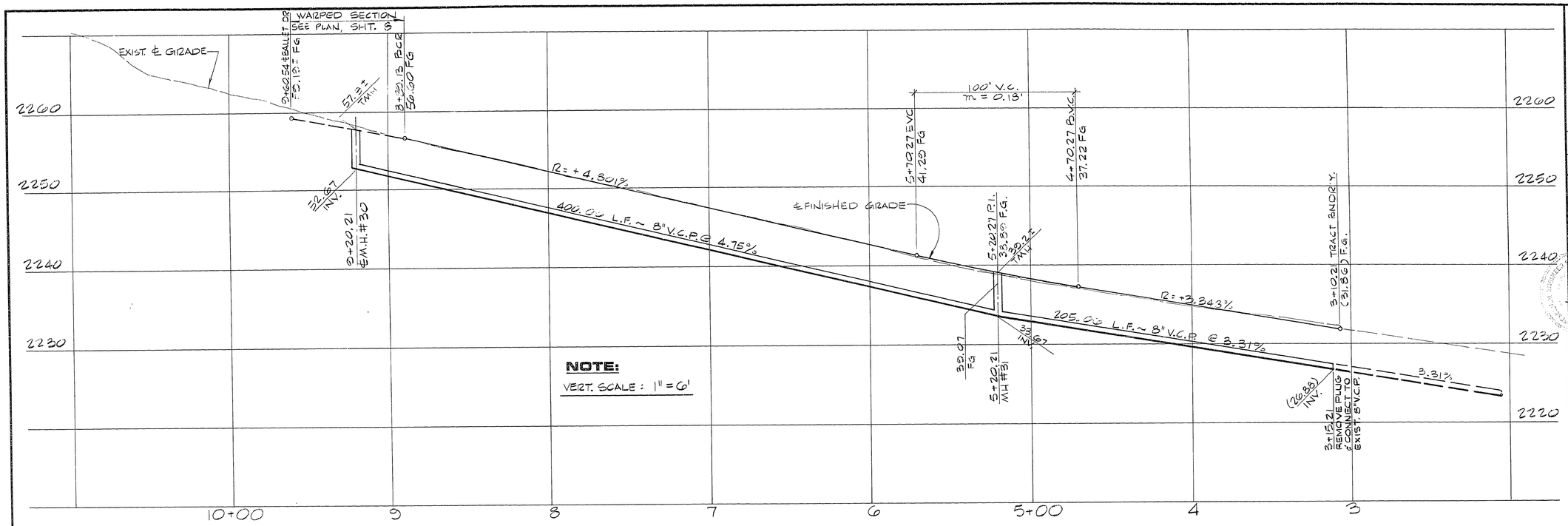

NOTE:
VERT. SCALE: 1" = 6'

PROFILE

SCALE: HORIZ. 1" = 30'
VERT. 1" = 6'

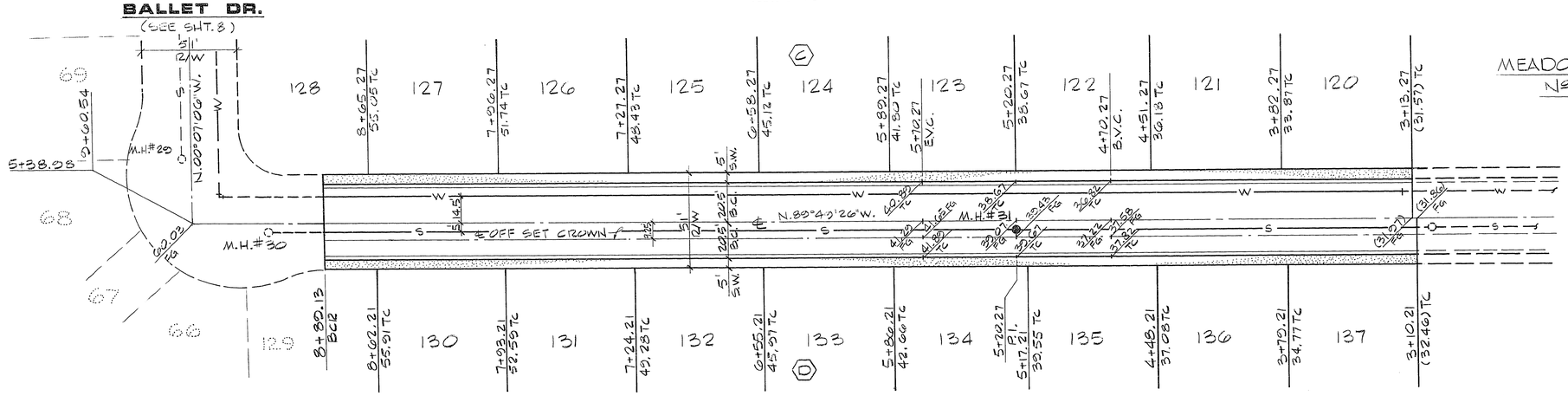

BALLET DR.

DANCER WAY

NORTH
SCALE: 1" = 30'

APPROVALS:

C.L.V. ENGINEER	DATE		
N/A C.L.V. FIELD OPERATIONS ENG'R.	DATE	N/A C.L.V. FIRE MARSHALL	DATE
P.A. Antos 12-9-80 C.L.V. SANITATION SUP'T.	DATE	N/A C.L.V. ELECTRICAL COORD.	DATE
12-11-80 C.L.V. TRAFFIC ENGINEER	DATE	12-11-80 C.L.V. QUALITY CONTROL ENG'R.	DATE

REV	DATE	DESCRIPTION

RECOMMENDED BY: G. C. WALLACE
3794 R.E. NO.
12/1/80 DATE

G. C. WALLACE
Consulting Engineers, Inc.
1100 East Sahara Ave. • Las Vegas, Nevada 89104 • 732-3330

LEWIS HOMES OF NEVADA
LEWIS HOMES — MEADOW VISTA NO. 4
DANCER WAY

SHEET **6** OF 12 SHEETS

JOB NO. 5543.5142

9/78 DIETERICH-POST 65328

24.7-94 102y-20 7.9.4