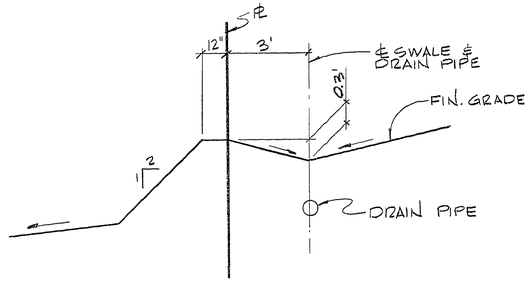

SECTION 6/12

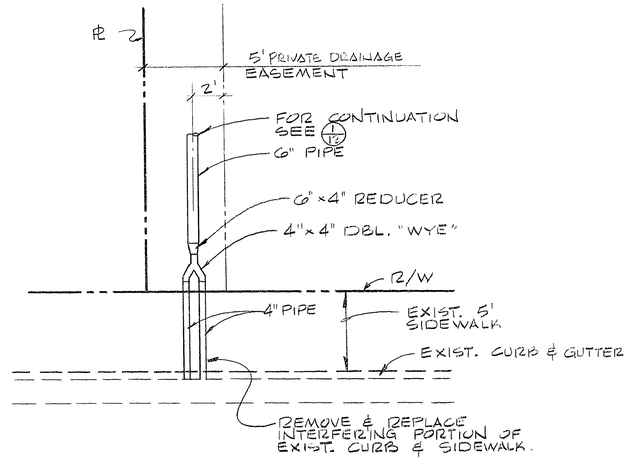

PLAN 4/12

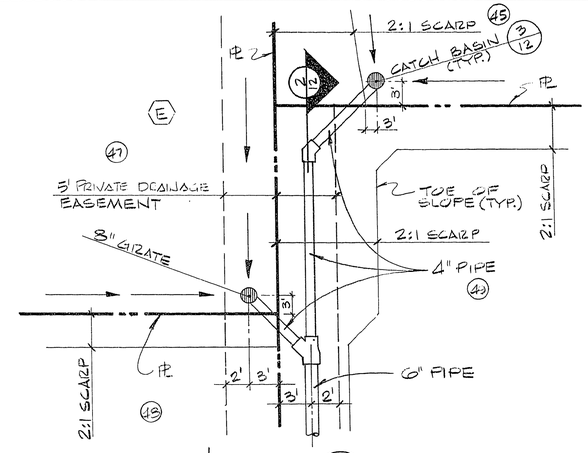

PLAN 1/12

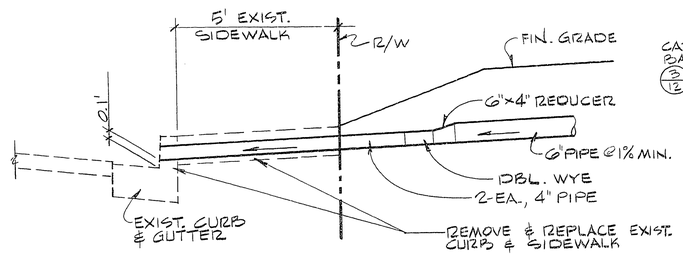

SECTION 5/12

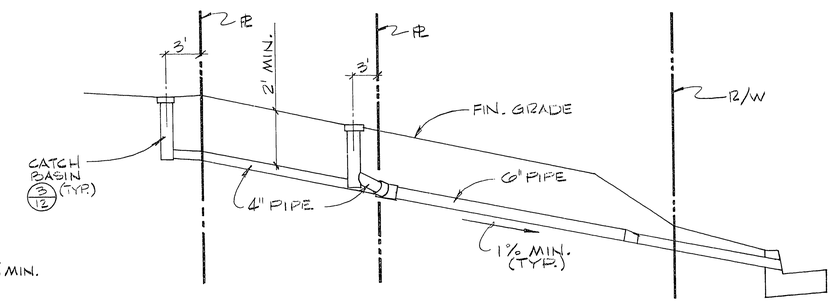

SECTION 2/12

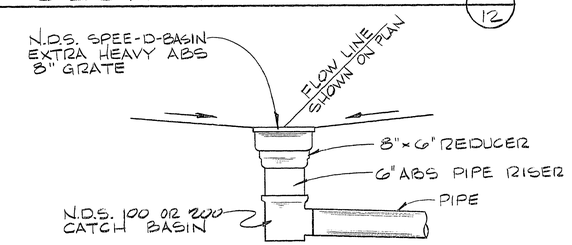

N.D.S. CATCH BASIN 3/12

SPEE-D-BASIN DRAIN NOTES:

1.) PIPE MATERIAL: ABS, PVC OR ADS CORRUGATED PLASTIC TUBING DISTRIBUTED BY ADVANCE DRAINAGE SYSTEMS, INC., BOX 480, POMONA, CALIF. 91769, 714-627-1415 OR APPROVED EQUAL.

2). SPEE-D-BASIN FITTINGS, CATCH BASIN & GRATE MANUFACTURED BY NATIONAL DRAIN SUPPLIES, INC. 8100 DEERING AVE., CANOGA PARK, CALIF., 91304 213-883-5950 OR APPROVED EQUAL.

3). ASSEMBLE ALL JOINTS W/PLASTIC SOLVENT PER MANUFACTURERS RECOMMENDATIONS.

APPROVALS:

12/4/80 offsite only
C.L.V. ENGINEER — DATE

NA
C.L.V. FIELD OPERATIONS ENG'R. — DATE

12-4-80
C.L.V. QUALITY CONTROL ENGINEER — DATE

REV	DATE	DESCRIPTION

RECOMMENDED: G. C. WALLACE 3374 R.E. NO. 12/6/80 DATE

G. C. WALLACE
Consulting Engineers, Inc.
1100 East Sahara Ave. • Las Vegas, Nevada 89104 • 732-3330

LEWIS HOMES OF NEVADA
LEWIS HOMES–MEADOW VISTA NO. 4
TYPICAL DETAILS

SHEET 12 OF 12 SHEETS

5543.5142
10/77 DIETERICH-POST 2112B .003 FILM