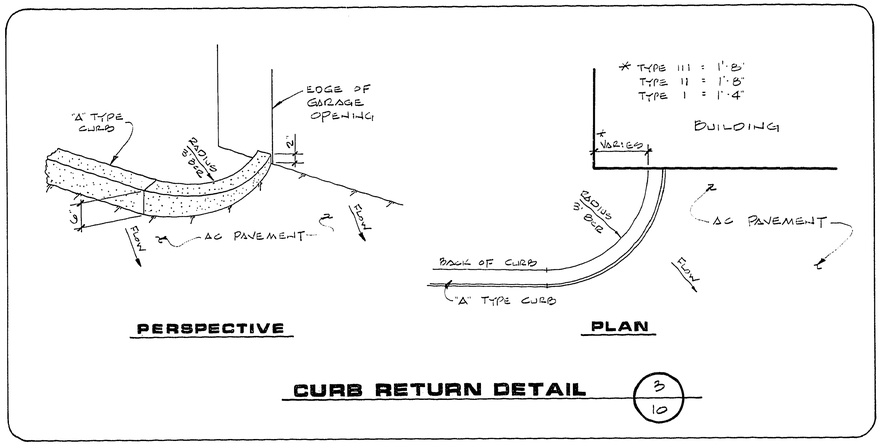

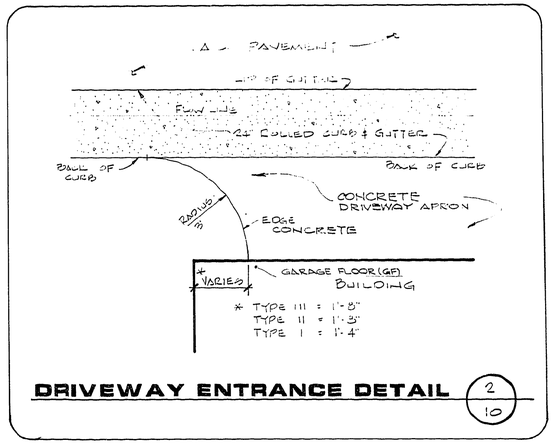

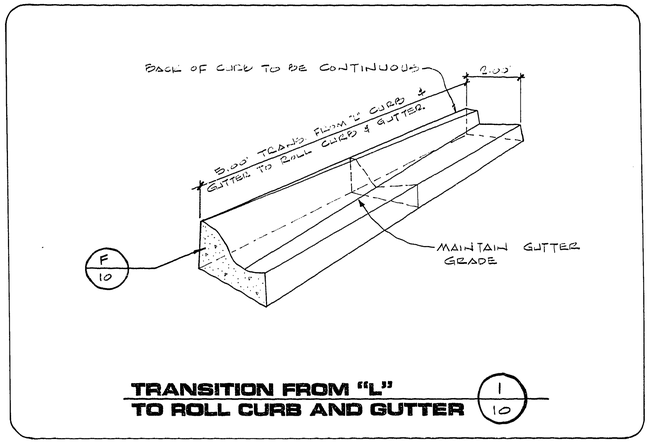

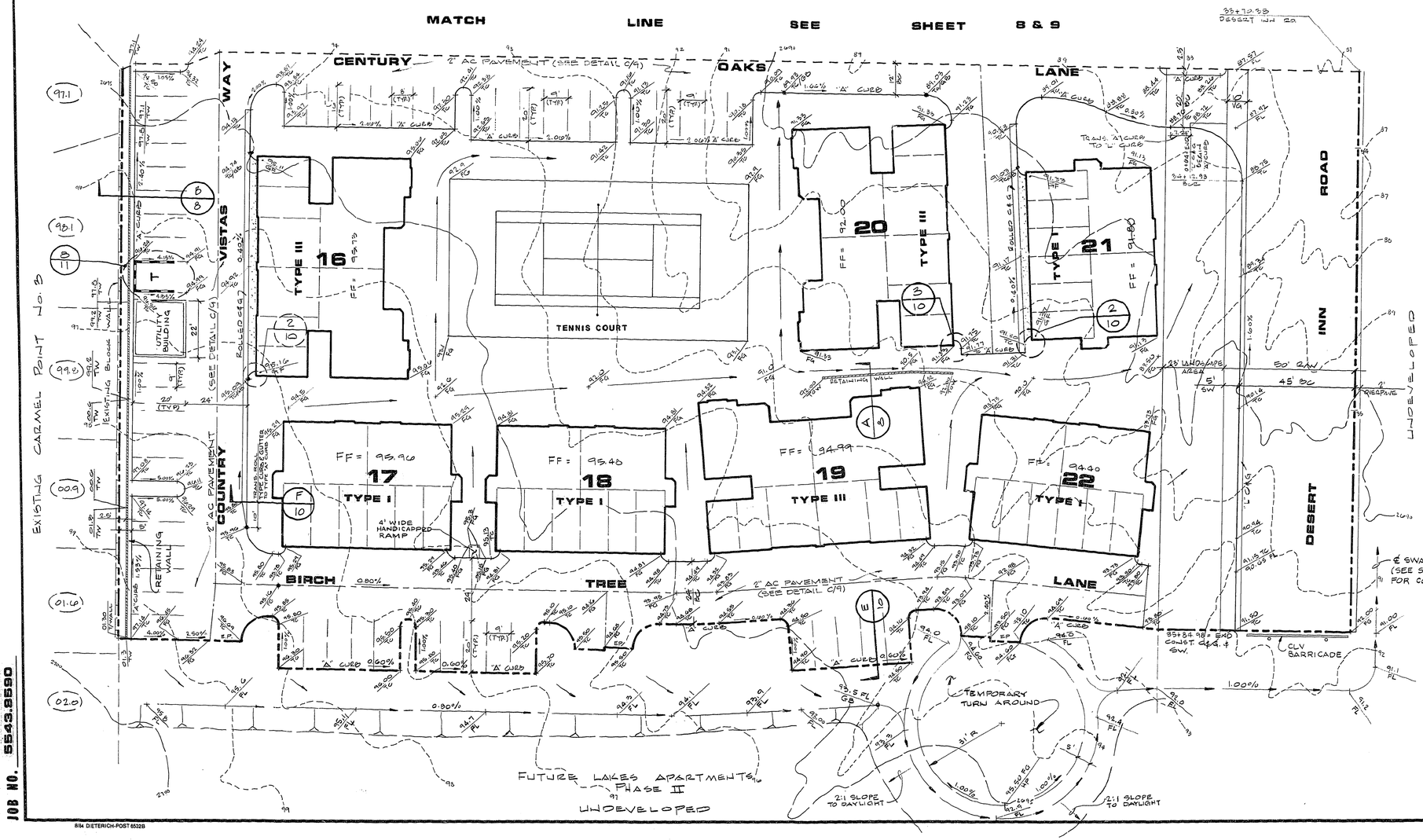

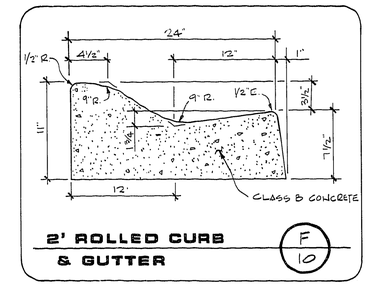

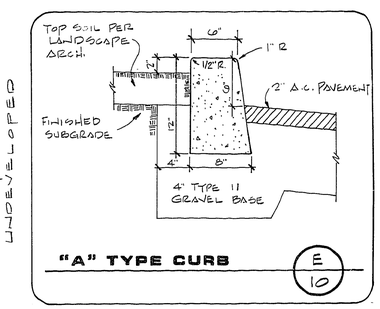

REV	DATE	DESCRIPTION
1	6/23	REVISED TO CONTROL TYPE CURB & GUTTER.

RECOMMENDED APPROVAL
DAVID P.N. HUBBLE
DATE 4-5-89
R.E. NO. 0526

G.C. WALLACE, INC.
Engineering/Architecture
1555 SOUTH RAINBOW BLVD./LAS VEGAS, NEVADA 89102

LEWIS HOMES OF NEVADA
LAKESIDE CONDOMINIUMS NO. 1
GRADING PLAN

SHEET 10 OF 11 SHEETS

JOB NO. 5543.8590

8/14 DIETERICH-POST 6532B

20-7-49 107Y-2021-1