NOTES:

1. INSTALL AT STATION 33+78.33 @ CL
2. FABRICATION & INSTALLATION PER CLV SP SECTION 639.
3. EXISTING SIGN TO BE REFURBISHED BY OTHERS. SIGN IS LOCATED AT THE NEON BONEYARD, 821 N. LAS VEGAS BLVD. DANIELLE KELLY FOR VIEWING (702-387-6366).

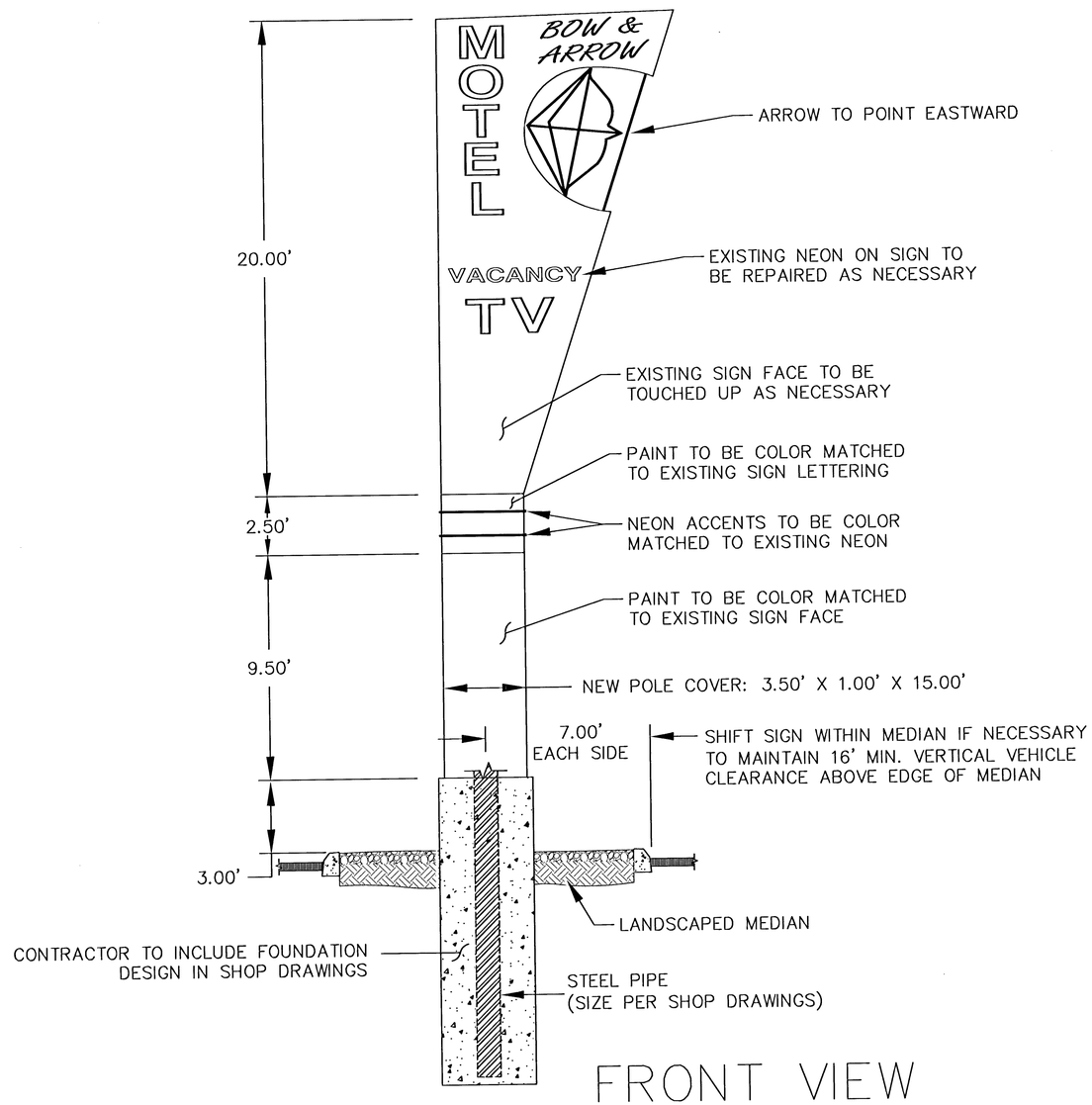

FRONT VIEW

(LOOKING UP STATION)

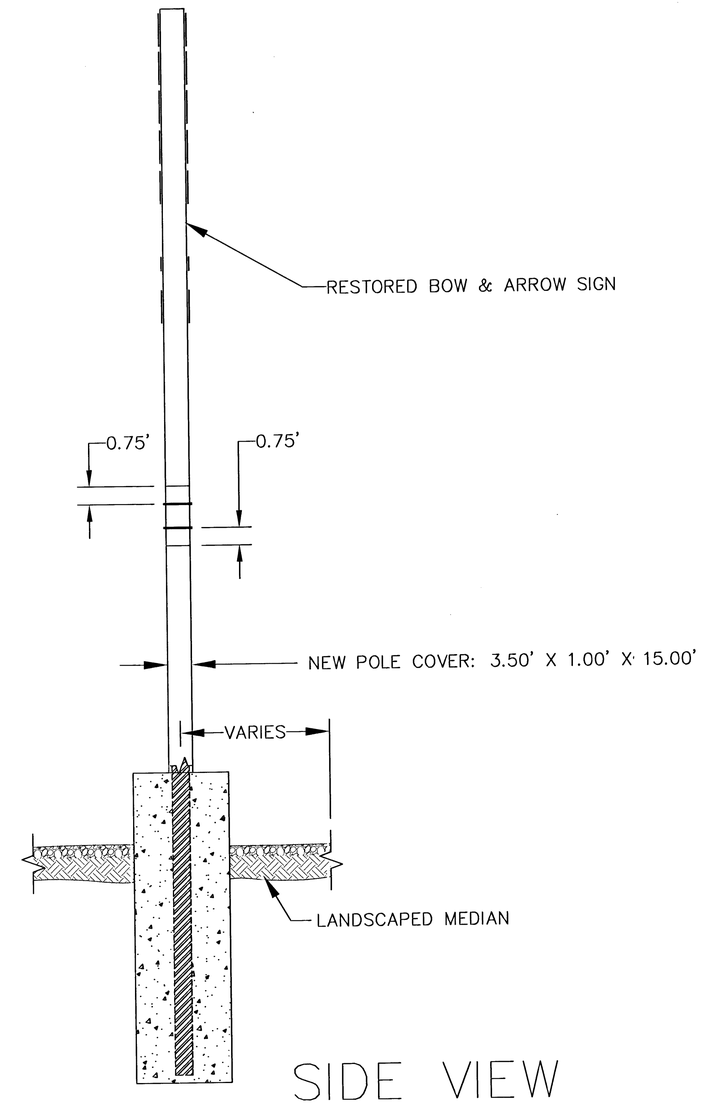

SIDE VIEW

Call before you Dig
Avoid cutting underground utility lines, it's costly.
Call 811
or
1-800-227-2600
Sale Gas: 24 hrs. emergency
1-702-455-7544

Avoid cutting underground utility lines, it's costly.
Call before you Overhead
1-702-227-2929
Nevada Power Environment and Safety Services Department

115857

12/4/08 F:\WDEPOT\CITY_ENGINEER\ENG_DESIGN\DESIGN\DESIGN\LAS VEGAS BLVD - NEON SIGNS\DWG\09 LVB NEON_100%+EMBARQ.DWG

REVISIONS

NO.	DATE:	DESCRIPTION	APP'D

DEPARTMENT OF PUBLIC WORKS
ENGINEERING DESIGN SECTION
CITY OF LAS VEGAS NEVADA

CITY ENGINEER (ACTING): CHERI L. EDELMAN, P.E.
PROGRAM MANAGER: JEREMY P. LEAVITT, P.E.
DESIGNED BY: BJP
DRAWN BY: BJP
CHECKED BY: JPL
SCALE: N.T.S.
DATE: DECEMBER 2008

TITLE: LAS VEGAS BOULEVARD
NEON SIGNS AND MEDIAN ISLAND IMPROVEMENTS
SHEET: BOW AND ARROW MEDIAN ELEMENT

REGISTERED PROFESSIONAL ENGINEER STATE OF NEVADA
JEREMY P. LEAVITT
CIVIL
NO. 015536
EXPIRES: 12/31/2009

Sheet
TYP-1
7 of 21
DRAWING NO.
107v4819