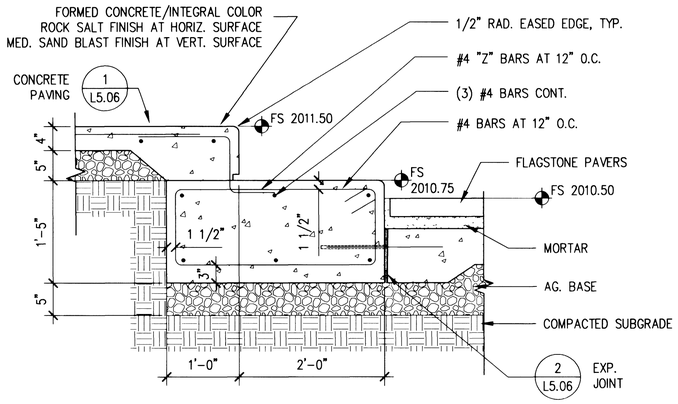

6 L5.04 CONCRETE SEAT WALL AT FLAGSTONE
1"=1'-0"

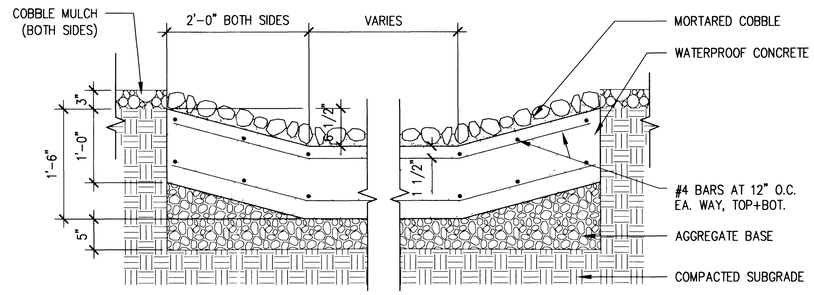

3 L5.04 STREAM BED
1"=1'-0"

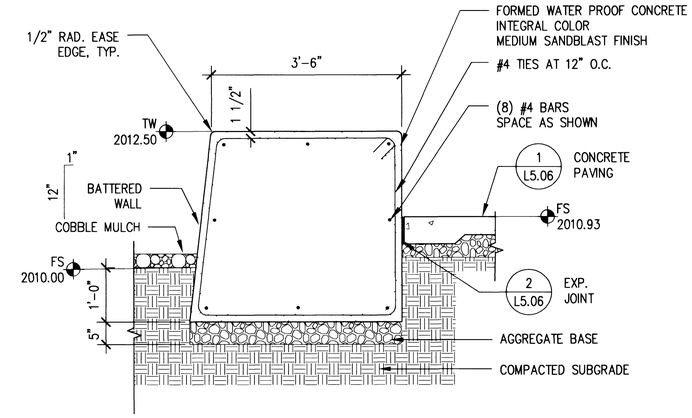

HEADWALL AT PLANTING

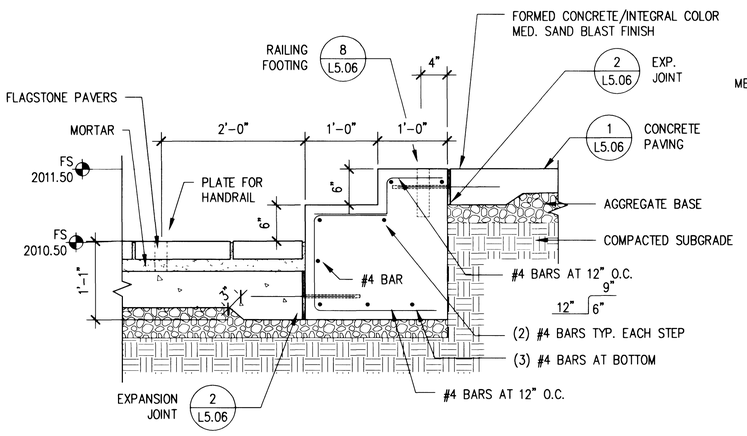

7 L5.04 CONCRETE STEPS AT RETAINING WALL
1"=1'-0"

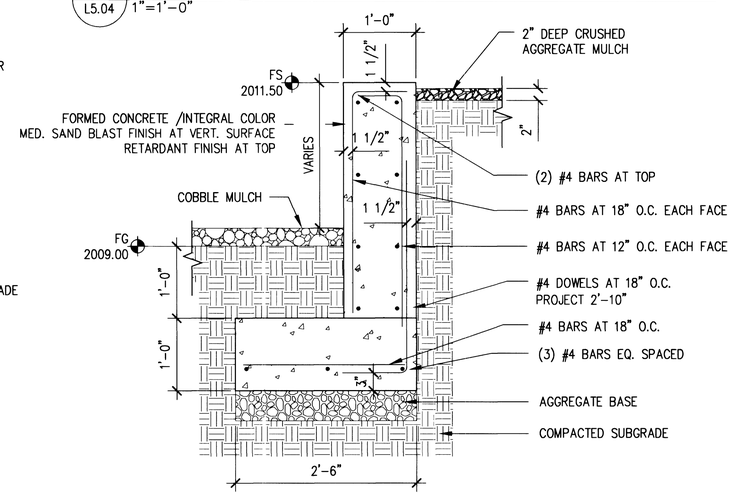

4 L5.04 RETAINING WALL AT PLANTING
1"=1'-0"

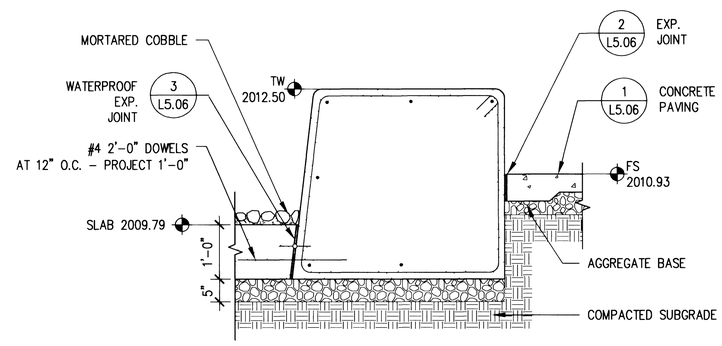

HEAD WALL AT WATER

1 L5.04 HEADWALL
3/4"=1'-0"

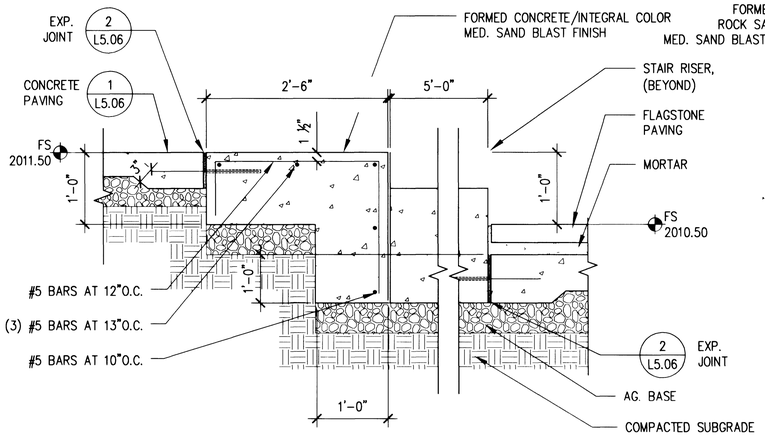

8 L5.04 THICKENED CHEEK WALL AT STEPS
1"=1'-0"

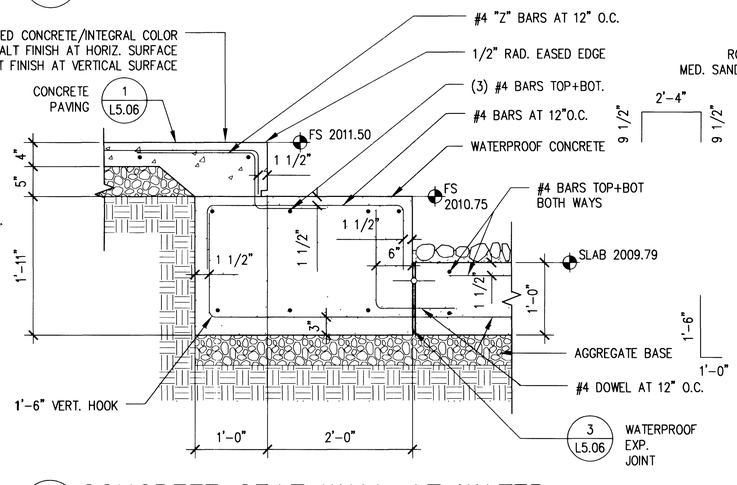

5 L5.04 CONCRETE SEAT WALL AT WATER
1"=1'-0"

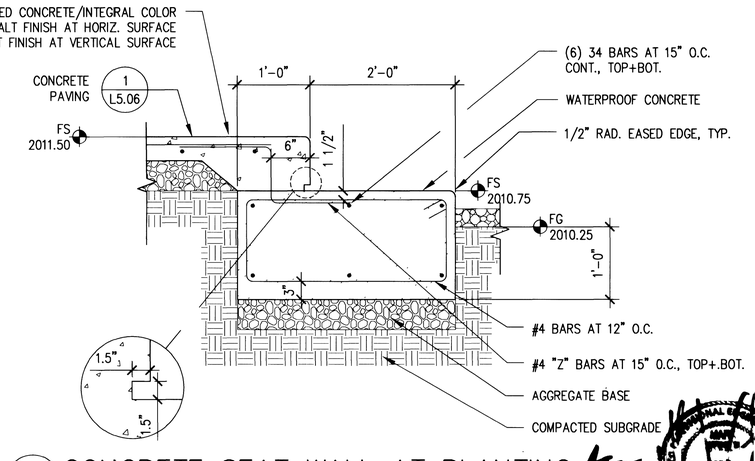

2 L5.04 CONCRETE SEAT WALL AT PLANTING
1"=1'-0"

38323

NO.	DATE:	DESCRIPTION	APP'D

REVISIONS

SWA
Laguna Beach
Houston
Dallas
San Francisco
Sausalito
2200 Bridgeway Boulevard
P O Box 5904
Sausalito
CA 94966 5904
www.swagroup.com

TITLE: LEWIS AVENUE CORRIDOR IMPROVEMENTS FPN STP-0170(075)

SHEET: SITE CONSTRUCTION DETAILS

BID NO. 02.1730.18

10-31-01

Sheet L5.04
32 of 46
DRAWING NO. 107-V3502