FQNID #:
FIB:BUR::56000299
FIB:BUR::56000194

INDEX SHEET

CITY OF LAS VEGAS, NEVADA

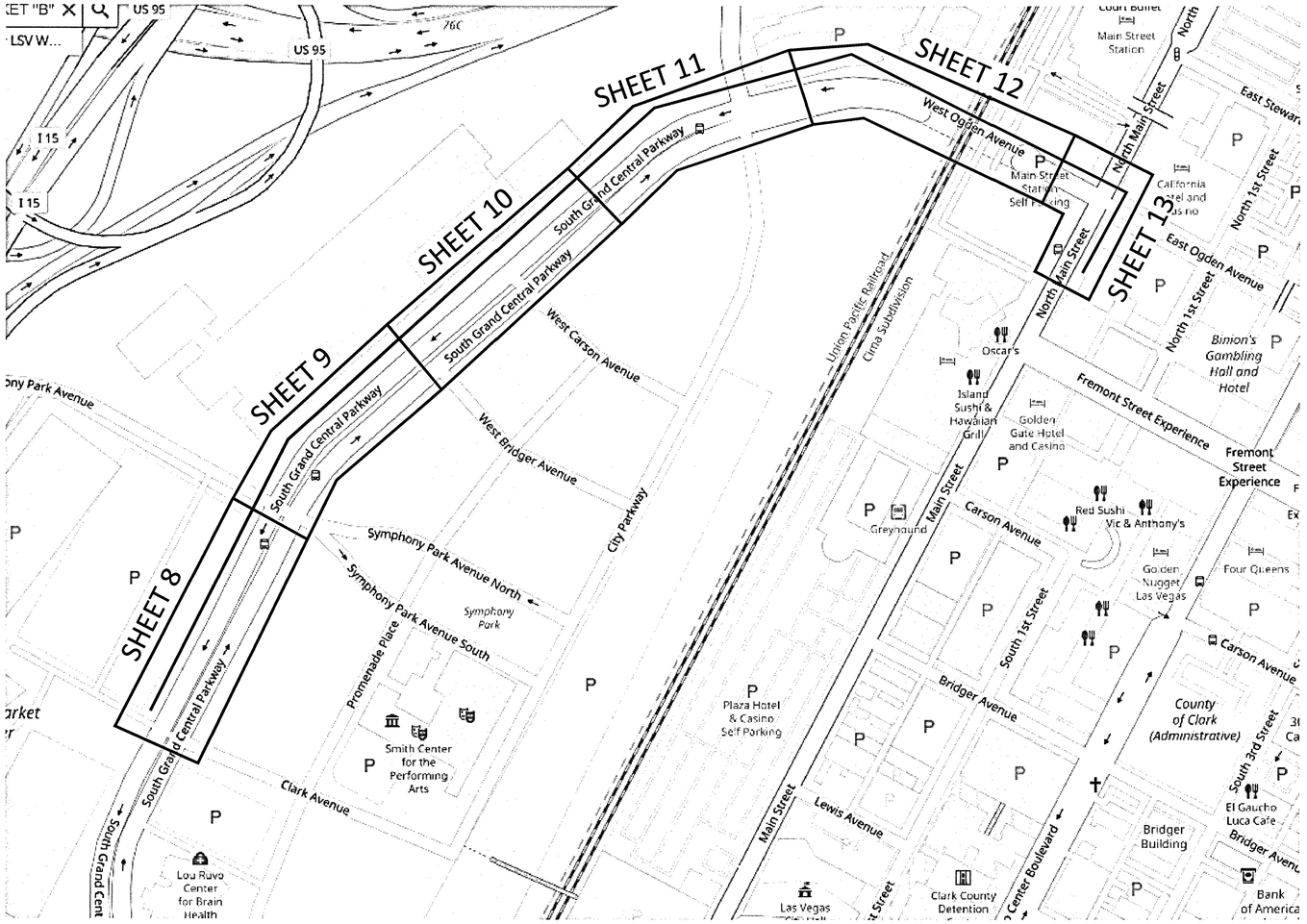

NORTH

MCI

PROJECT: 916079, 916078, 916119, 916120, 916121

CELL SITE: LSV WORLD MARKET B

CITY OF LAS VEGAS, NEVADA

CLARIFICATION NO.	QUANTITY

MCI COMMUNICATIONS SERVICES, INC.

OUTSIDE PLANT CONSTRUCTION

TITLE: CELL SITE: LSV WORLD MARKET B

PROJECT TITLE

DATE: 11/14/2018

DRAWN BY: PVEGA

REVISIONS

DATE	INITIAL

EXCEPT AS MAY BE OTHERWISE PROVIDED BY CONTRACT, THESE DRAWINGS AND SPECIFICATIONS SHALL REMAIN THE PROPERTY OF MCI COMMUNICATIONS SERVICES, INC., BOTH BEING ISSUED IN STRICT CONFIDENCE AND SHALL NOT BE REPRODUCED, COPIED, OR USED FOR ANY PURPOSE WITHOUT SPECIFIC WRITTEN PERMISSION.

SCALE

HORIZONTAL: 1"=30'

VERTICAL: NA

MP _____ TO MP _____

SHEET 1 OF 14

FILE: LSV WORLD MARKET B_11-14-18

M:\VERIZON ONEFIBER\LAS VEGAS\LSV FOREMASTER\LSV WORLD MARKET B\CONSTRUCTION DRAWINGS

GENERAL NOTES / CLARIFICATION NOTES

CITY OF LAS VEGAS GENERAL NOTES:

1. ALL CONSTRUCTION AND MATERIALS SHALL BE IN ACCORDANCEWITH THE "UNIFORM STANDARD SPECIFICATIONS FOR PUBLICWORKS CONSTRUCTION OFF-SITE IMPROVEMENTS, CLARK COUNTY AREA NEVADA", LATEST ISSUE; THE "UNIFORM STANDARD DRAWINGS FOR PUBLICWORKS CONSTRUCTION, CLARK COUNTY AREA NEVADA", LATEST REVISED EDITION; THE "SUMMERLIN IMPROVEMENT STANDARDS" FOR WORK IN THE SUMMERLIN AREA; AND OTHER APPLICABLE APPROVED STANDARDS ISSUED BY THE CONTROLLING AGENCY; THE UNIFORM BUILDING CODE; AND ALL LOCAL CITY CODES AND ORDINANCES APPLICABLE, EXCEPT AS NOTED ON THIS SHEET AS "DEVIATIONS FROM STANDARDS".
2. THE EXISTENCE AND LOCATION OF ANY OVERHEAD OR UNDERGROUND UTILITY LINES, PIPES, OR STRUCTURES SHOWN ON THESE PLANS ARE OBTAINED BY A RESEARCH OF THE AVAILABLE RECORDS. EXISTING UTILITIES AS SHOWN FROM CLV PLANS LIBRARY ARE APPROXIMATE AND FOR RECORD PURPOSES. EXISTING UTILITIES ARE LOCATED ON PLANS ONLY FOR THE CONVENIENCE OF THE CONTRACTOR. EXISTING UTILITY SERVICE LATERALS MAY NOT BE SHOWN ON THE PLANS. THE CONTRACTOR SHALL, AT HIS OWN EXPENSE, LOCATE ALL UNDERGROUND AND OVERHEAD INTERFERENCE'S WHICH MAY AFFECT HIS OPERATION DURING CONSTRUCTION AND SHALL TAKE ALL NECESSARY PRECAUTIONS TO AVOID DAMAGE TO SAME. THE CONTRACTOR SHALL USE EXTREME CAUTION WHENWORKING NEAR OVERHEAD UTILITIES SO AS TO SAFELY PROTECT ALL PERSONNEL AND EQUIPMENT, AND SHALL BE RESPONSIBLE FOR ALL COST AND LIABILITY IN CONNECTIONTHEREWITH.
3. THE CONTRACTOR SHALL TAKE ALL PRECAUTIONARY MEASURES NECESSARY TO PROTECT EXISTING UTILITY LINES, STRUCTURES AND STREET IMPROVEMENTSWHICH ARE TO REMAIN IN PLACE, FROM DAMAGE, AND ALL SUCH IMPROVEMENTS OR STRUCTURES DAMAGED BY THE CONTRACTOR'S OPERATIONS SHALL BE REPAIRED OR REPLACED SATISFACTORY TO THE CITY ENGINEER AND OWNING UTILITY COMPANY AT THE EXPENSE OF THE CONTRACTOR.
4. ALL CONSTRUCTION SHALL BE AS SHOWN ON THESE PLANS, ANY REVISIONS SHALL HAVE THE PRIOR WRITTEN APPROVAL OF THE CITY ENGINEER.
5. TYPE V CEMENT SHALL BE USED IN ALL OFF-SITE CONCRETE WORK. CONCRETE TO BE 3000 P.S.I. MINIMUM @28 DAYS. MIX DESIGNS TO BE APPROVED BY THE CITY, PRIOR TO THE USE ON THE PROJECT.
6. PERMITS ARE REQUIRED FOR ANYWORK IN THE PUBLIC RIGHT-OF-WAY. THE CONTRACTOR SHALL SECURE ALL PERMITS AND INSPECTIONS REQUIRED FOR THIS CONSTRUCTION.
7. EXPANSION JOINTS REQUIRED, MAXIMUM EVERY 300' IN EXTRUDED-TYPE CURB.
8. AC PAVEMENT TO BE ONE-HALF INCH (½") ABOVE LIP OF ALL GUTTERS AFTER COMPACTION, EXCEPT AT SIDEWALK RAMPS AND CROSS GUTTERS.
9. CURB AND GUTTER FOUND TO BE UNACCEPTABLE TO THE CITY OF LAS VEGAS SHALL BE REMOVED AND REPLACED PER STANDARD DRAWING 216.
10. SIDEWALK RAMPS SHALL BE CONSTRUCTED IN EACH QUADRANT OF AN INTERSECTION PER STANDARD DRAWING 235. EXACT LOCATION OF RAMPS MAY BE ADJUSTED IN THE FIELD BY A CITY INSPECTOR.
11. CONTRACTOR SHALL PROVIDE ALL NECESSARY HORIZONTAL AND VERTICAL TRANSITIONS BETWEEN NEW CONSTRUCTION AND EXISTING SURFACES TO PROVIDE FOR PROPER DRAINAGE AND FOR INGRESS AND EGRESS TO NEW CONSTRUCTION. THE EXTENT OF THE TRANSITIONS TO BE AS SHOWN ON PLANS.
12. ALL GRADING WORK SHALL CONFORM TO THE SOILS REPORT AS PREPARED BY THE (COMPANY, REPORT #, DATE) APPROVED BY THE CITY ENGINEER, AND AS SHOWN ON THESE PLANS.
13. EXACT LOCATION OF ALL SAWCUT LINES MAY BE ADJUSTED OR DETERMINED IN THE FIELD BY A CITY OF LAS VEGAS ENGINEER IF LOCATION ON PLANS IS NOT CLEARLY SHOWN, OR EXISTING PAVEMENT CONDITION REQUIRES RELOCATIONS.
14. THE CONTRACTOR SHALL TAKE ALL PRECAUTIONS NECESSARY TO PROTECT EXISTING PERMANENT SURVEY MONUMENTS. ANY MONUMENTS DISTURBED SHALL BE REPLACED AND ADJUSTED PER AVAILABLE RECORDS IN ACCORDANCE WITH N.R.S. STATUTE NO. 625.380 & CITY OF LAS VEGAS TITLE 18, APPENDIX D.
15. UTILITY COMPANY METER BOXES, MANHOLE LIDS, VALVE COVERS, ETC., SHALL BE LOCATED OUT OF DRIVEWAYS, DRIVEWAY APRONS, FLOWLINES, AND CROSS GUTTERS UNLESS WRITTEN APPROVAL IS GRANTED BY THE UTILITY COMPANY AND THE CITY ENGINEER.

   WALL NOTES:.
16. ALLWALLS, NEW OR EXISTING, ARE ONLY SHOWN ON CIVIL PLANS FOR THE PURPOSE OF REVIEWING GRADING RELATIONSHIPS; FLOOD CONTROL AND SIGHT DISTANCE AT INTERSECTIONS. NEW WALLS REQUIRE A SEPARATE PERMIT AND INSPECTION BY THE BUILDING DEPARTMENT.
17. ASPHALT MIX DESIGN MUST BE SUBMITTED AND APPROVED BY THE CITY ENGINEER PRIOR TO THE PLACEMENT OF ASPHALT WITHIN CITY RIGHT OF WAY.
18. CONTRACTOR SHALL ADJUST ALL NEW AND EXISTING INLETS, VALVE BOXES, MANHOLE RIMS, AND SEWER CLEAN OUTS, ETC. TO FINISH GRADE AS APPLICABLEWHETHER OR NOT THEY ARE SHOWN ON THE PLANS.
19. MATERIALS, HANDLING AND PLACEMENT OF PORTLAND CEMENT CONCRETE SHALL BE IN ACCORDANCE WITH APPLICABLE SECTIONS OF NDOT OR THE CLARK COUNTY AREA SPECIFICATIONS (AS APPLICABLE) AND THE PLANS AND DETAILS SHOWN HEREON.
20. WHEN INSTALLING UNDERGROUND FACILITIES THAT REQUIRE UNDERGROUND LOCATING DEVICES SUCH AS MARKER BALLS, LOCATING RIBBON, ETC, THE CONTRACTOR SHALL PROVIDEWRITTEN DOCUMENTATION TO OFFSITE INSPECTION AND TESTING CERTIFYING THAT ALL DEVICES HAVE BEEN PLACED AND VERIFIED TO BE IN GOODWORKING CONDITION PRIOR TO THE CONSTRUCTION OF ANY ROAD BASE.
21. SANITARY SEWER AND STORM DRAIN FINAL LOCATION MAP(S) SHALL BE PROVIDED TO THE CITY AND APPROVED PRIOR TO ACCEPTANCE OF FACILITY VIDEO INSPECTION. THE MAP(S) SHALL INCLUDE THE HORIZONTAL AND VERTICAL (INVERT) LOCATION OF PUBLIC SEWER MANHOLES, STORM DRAIN MANHOLES AND TRANSITION STRUCTURES, STORM DRAIN LATERALS AT THE CONNECTION TO THE STORM DRAIN MAIN AND AT THE CONNECTION TO A DROP INLET, THE CONNECTION OF SEWER SERVICE LATERALS TO THE SEWER MAIN ANDWHERE THE SEWER SERVICE LATERALS EXIT THE PUBLIC RIGHT-OF-WAY, AND STORM DRAIN MAIN ALIGNMENT, INCLUDING DEFLECTION POINTS. THE LOCATION SHALL BE DESCRIBED BY COORDINATESWHICH SHALL BE BASED ON THE OFFICIAL HORIZONTAL AND VERTICAL CONTROL NETWORKS OF THE CITY OF LAS VEGAS. FINAL LOCATION MAPS MUST BE SEALED AND CERTIFIED BY A NEVADA PROFESSIONAL LAND SURVEYOR TO HAVE POSITIONAL CERTAINTIES OF ± 0.09 METERS (± 0.3 FEET) HORIZONTALLY AND VERTICALLY. A SEPARATE ELECTRONIC COMMA DELIMITED FILE FOR THE SANITARY SEWER AND STORM DRAIN COORDINATES SHALL ALSO ACCOMPANY THE SANITARY SEWER AND STORM DRAIN FINAL LOCATION MAP(S).

    OR

    SANITARY SEWER AND STORM DRAIN FACILITIES SHOWN ON THESE PLANS SHALL BE USED TO MEET THE REQUIREMENTS OF NRS 455 AND SHALL SHOW AT A MINIMUM THE HORIZONTAL AND VERTICAL (INVERT) LOCATION OF PUBLIC SEWER MANHOLES, STORM DRAIN MANHOLES, STORM DRAIN LATERALS AT THE CONNECTION TO THE STORM DRAIN MAIN AND AT THE CONNECTION TO A DROP INLET, AND THE CONNECTION OF SEWER SERVICE LATERALS TO THE SEWER MAIN AND WHERE THE SEWER SERVICE LATERALS EXIT THE PUBLIC RIGHT-OF-WAY. ANY DEVIATIONS FROM THE INFORMATION SHOWN SHALL BE NOTED AND SUBMITTED AS A REVISION TO THE PLANS AND APPROVED PRIOR TO ACCEPTANCE OF FACILITY VIDEO INSPECTION.
22. CCTV VIDEO INSPECTION IS REQUIRED FOR ALL SEWER AND STORM DRAINS. THE CCTV VIDEO INSPECTIONS NEED TO BE PERFORMED PER THE DESIGN AND CONSTRUCTION STANDARDS FOR WASTEWATER COLLECTION SYSTEMS LATEST EDITION.
23. A SEPARATE BORING PERMIT IS REQUIRED FOR ALL BORING ACTIVITIES.
24. REVISED 02/03/15

GENERAL NOTES

1. * WORLDCOM COMPRISES THE FOLLOWING OPERATING ENTITIES:

   - BROOKS FIBER PROPERTIES, INC.
   - MCI METRO ACCESS TRANSMISSION SERVICES, LLC
   - SOUTHERNET, INC.
   - MCI WORLDCOM NETWORK SERVICES, INC. (COMPRISES MCI TELECOMMUNICATIONS CORP. (MCI LD) AND WORLDCOM NETWORK SERVICES, INC. (WORLDCOM LD)
   - MFS TELECOM, INC.
   - TELECOM*USA, INC.
   - SOUTHERNET SYSTEMS, INC.
   - MCI WORLDCOM NETWORK SERVICES OF VIRGINIA
   - MCI METRO ACCESS TRANSMISSION SERVICES OF VIRGINIA, INC.

   * THE WORLDCOM FACILITIES WITHIN THIS CONSTRUCTION PACKAGE ARE HELD BY THE OPERATING ENTITY(IES) INDICATED IN BOLD TYPE.
2. ALL WORK TO BE PERFORMED IN STRICT ACCORDANCE WITH THE APPLICABLE CODES OR REQUIREMENTS OF ANY REGULATING GOVERNMENTAL AGENCY, WORLDCOM TELECOMMUNICATIONS CORPORATIONS, AND THE RIGHT-OF-WAY GRANTOR.
3. LOCATIONS OF SOME OF THE PHYSICAL FEATURES WERE OBTAINED FROM DATED RAILROAD EVALUATION MAPS OR OTHER DRAWINGS AND MAY NOT BE AS SHOWN OR DEPICTED ON THESE DRAWINGS.
4. UNDERGROUND UTILITIES HAVE BEEN PLOTTED FROM AVAILABLE RECORDS AND FIELD OBSERVATIONS BUT ARE NOT NECESSARILY EXACT. THERFORE, UTILITY LOCATIONS WILL BE VERIFIED AT LEAST 100 FEET IN ADVANCE OF TRENCHING OR PLOWING, SO THAT CHANGES IN CABLE PLACEMENT CAN BE MADE IN THE EVENT OF CONFLICT.
5. ALL KNOWN BURIED OBSTRUCTIONS ARE SHOWN ON THE CONSTRUCTION DRAWINGS. ANY AND ALL OTHERS ENCOUNTERED ARE ALSO THE RESPONSIBILITY OF THE CONTRACTOR TO LOCATE, PROTECT AND REPAIR IF DAMAGED.
6. ANY AND ALL IMPROVEMENTS, SUCH AS ASPHALT OR CONCRETE PAVEMENT, CURBS, GUTTERS, WALKS, DRAINAGE DITCHES, EMBANKMENTS, SHRUBS, TREES, GRASS SOD, ETC., IF DAMAGED, SHALL BE RESTORED TO ORIGINAL CONDITION.
7. EQUIPMENT TYPES SPECIFIED HEREIN (IE: "BACKHOE", SWAMP PLOW" ETC.) ARE SUGGESTIONS ONLY AND ARE NOT INTENDED AS REQUIREMENTS. CONTRACTOR WILL BE NOTIFIED AS TO EXPECTATIONS.
8. SHORING OF BORE PITS AND TRENCHES IN ACCORDANCE WITH OSHA REGULATIONS IS MANDATORY.
9. BURIED CABLE MARKERS WILL BE PLACED AT ALL UNDERGROUND UTILITY LOCATIONS AND ALL OTHER LOCATIONS IN ACCORDANCE WITH THE CONSTRUCTION DRAWINGS AND THE OUTSIDE PLANT HANDBOOK.
10. ALL 4" ID CONDUIT WILL BE SCHEDULE 40 (EG.: PVC OR GSP/BSP), OR AS SPECIFIED.
11. UNDERGROUND CONDUIT WILL BE PLACED AT 48" MINIMUM COVER UNLESS OTHERWISE SPECIFIED ON THE CONSTRUCTION DRAWINGS.

ADDENDUM NOTES

CLARIFICATION NOTES

1. STATION
2. REFERENCE ORDER NUMBER
3. CLARIFICATION NO. AND/OR MINIMUM COVER
4. CLARIFICATION NO.
5. CLARIFICATION NO. AND/OR FOOTAGE
6. CLARIFICATION NO. AND/OR FOOTAGE
7. SPECIFIED CONDUIT, HANDHOLE/MANHOLE NO., SPECIFIED PURPOSE AND MATERIAL, BRIDGE NO. AND RAILROAD STATION, MATERIAL, POLE NO.

1.	
2.	
3.	
4.	
5.	
6.	
7.	

110	JACK AND DRY BORE CONDUIT(S)
210	PLACE CONDUIT
212	PLACE HIGH DENSITY POLYETHYLENE (HDPE)
213	ROCK ADDER
214	SLURRY BACKFILL ADDER
215	EXPOSE CONDUIT
216	EXPOSE COMDUIT AND RELOCATE
217	EXPOSE CONDUIT AND REPLACE/SUBSTITUTE
218	EXPOSE AND REMOVE CONDUIT
219	EXPOSE AND REMOVE CONDUIT (ABANDONED)
220	CONCRETE ENCASE
221	REMOVE CONCRETE ENCASEMENT
222	REMOVE CONCRETE CAP
240	PLACE HANDHOLE
244	REMOVE EXISTING HANDHOLE
245	RELOCATE HANHOLE
	REPLACE/SUBSTITUTE HANDHOLE
247	EXCAVATE SPLICE PIT
250	PLACE MANHOLE
252	REMOVE EXISTING MANHOLE
255	RELOCATE PRECAST MANHOLE
256	REPLACE/SUBSTITUTE PRECAST MANHOLE
260	CONSTRUCT WALL
270	REMOVE AND RESTORE ASPHALT
280	REMOVE AND RESTORE CONCRETE
281	REMOVE AND RESTORE SIDEWALK
282	REMOVE AND RESTORE CURBING
310	ATTACH CONDUIT TO WALL OR STRUCTURE
315	DETACH CONDUIT FROM WALL OR STRUCTURE
320	CORE BORE
330	ATTACH PULL/SPLICE BOX TO WALL OR STRUCTURE
410	PULL CABLE
411	PULL THROUGH DUCT (INNERDUCT)
415	REMOVE CABLE FROM CONDUIT
420	REPOSITION ACTIVE CABLE SLACK
510	DIRECT BURY CABLE
515	EXPOSE DIRECT BURIED CABLE
516	EXPOSE DIRECT BURIED CABLE AND RELOCATE
517	REMOVE AND DISPOSE OF CABLE
520	PLACE AERIAL CABLE
525	RELOCATE AERIAL CABLE
526	DELASH AERIAL CABLE
527	RELASH AERIAL CABLE
528	REMOVE AERIAL CABLE
530	PLACE POLE/PUSH BRACE
535	REMOVE POLE/PUSH BRACE
610	JETTING CONDUIT
620	EMBEDMENT PLOW
630	DIRECTIONAL BORE
710	PLACE BURIED CABLE MARKERS AND SIGNS/MWCOM
	WATER CROSSING SIGNS
711	PLACE ISOLATOR/PROTECTION SYSTEM AT EXISTING
	HANDHOLES/MANHOLES
712	REMOVE BURIED CABLE MARKER POST/HARDWARE
714	REMOVE CONCRETE BURIED CABLE MARKER POST

MCI

PROJECT: 916079, 916078, 916119, 916120, 916121

CELL SITE: LSV WORLD MARKET B

CITY OF LAS VEGAS, NEVADA

CLARIFICATION NO.	QUANTITY

MCI COMMUNICATIONS SERVICES, INC.

OUTSIDE PLANT CONSTRUCTION

TITLE: CELL SITE: LSV WORLD MARKET B

PROJECT TITLE

DATE: 11/14/2018

DRAWN BY: PVEGA

REVISIONS

DATE	INITIAL

EXCEPT AS MAY BE OTHERWISE PROVIDED BY CONTRACT, THESE DRAWINGS AND SPECIFICATIONS SHALL REMAIN THE PROPERTY OF MCI COMMUNICATIONS SERVICES, INC. BOTH BEING ISSUED IN STRICT CONFIDENCE AND SHALL NOT BE REPRODUCED, COPIED, OR USED FOR ANY PURPOSE WITHOUT SPECIFIC WRITTEN PERMISSION.

SCALE

HORIZONTAL: 1"=30'

VERTICAL: NA

MP _____ TO MP _____

SHEET 2 OF 14

FILE: LSV WORLD MARKET B_11-14-18

M:\VERIZON ONEFIBER\LAS VEGAS\LSV FOREMASTER\LSV WORLD MARKET B\CONSTRUCTION DRAWINGS

NOTES CONTINUED/CONTACT SHEET

GROUNDING NOTES

11.4 HANDHOLE/MANHOLE GROUNDING

All splice handholes/manholes will be grounded to conform with the MCI typical engineering drawing shown in Appendix A.

MCI-furnished materials:

- One 5/8-inch x 8-foot copper-clad steel ground rod equipped with a 15-foot #6 AWG pigtail
- One surge arrestor handhole•One isolator/protector system with 30 foot harness for use on a straight splice, or
- One isolator/protector system with 30-foot harness system for use at splices with a spur cable.

11.5 AERIAL CABLE GROUNDING

Cable sheath to strand bonds and grounding as required by National Electrical Code and Power Company Codes are required at all riser locations of an aerial segment.

Bond cable sheath and suspension strand tomulti-ground neutral (MGN) vertical grounding conductor if one exists; if not, use a driven ground rod or a non-insulated guy.

A guy may also require grounding. This is determined by establishing the exposure status (exposed or unexposed) of the guy.

All exposed guys must be either grounded or insulated. A guy is exposed if:

- It is attached to the same pole as open power conductors or spacer cable of any voltage.
- It crosses such power conductors.
- It is within ten feet horizontally (and any distance vertically) of such power conductors.

Grounding is the preferred treatment for exposed guys, except for the following cases in which they must be insulated:

- The MCI guy fastened to the pole in power company working space and a grounded guy would offer an additional hazard to power company lineman.
- Within 1/2-mile of a power station.
- Where electrolytic corrosion of anchors has occurred (unexposed guys, in this case must be separated from the cable strand at the pole, and electrical connection through hardware must be avoided).

Adequate grounding for MCI guys may be obtained through connection to any of the following:

- Vertical grounding conductor of power system multi-ground neutral (with permission of the power company).
- Suspension strand of grounded MCI cable.
- Common anchor rod with a power guy that is connected to the multi-grounded neutral.

Unexposed guys need not be grounded for protection reasons; however, connecting anchor guys to a grounded MCI strand is recommended, as it will lower the cable-to-ground impedance. This helps to reduce cable damage caused by lightning.

MCImetro Access Transmission Services Corp d/b/a Verizon Access Transmission Service (Verizon)

OUTSIDE PLANT ENGINEERING:

PROJECT ENGINEER: CORY VANDENBOS
SUPERVISOR: N/A
MANAGER: N/A

OUTSIDE PLANT CONSTRUCTION:

PROJECT SUPERVISOR:
FIELD CONST. SUPERINTENDENT:
MANAGER: N/A

RIGHT-OF-WAY:

AGENT:
MANAGER:

CONTRACTS:

COORDINATOR: N/A
MANAGER: N/A

OTHERS:

PROGRAM MANAGER: N/A
LIGHTWAVE ENGINEER: N/A
CIVIL ENGINEER: N/A
TERMINAL CONST. REP.: N/A
SPLICING MANAGER: N/A
TSO MANAGER: N/A

ENGINEERING CONTRACTOR

NAME OF FIRM: BPG DESIGNS 1-602-954-2223
PROJECT MANAGER: CORY VENDENBOS 1-602-739-8813
ENG. PROJECT SUPERVISOR:

CONSTRUCTION CONTRACTOR

NAME OF FIRM: TEAM FISHEL 1-702-644-4565
PROJECT COORDINATOR:

CITY GOVERNMENT

BUREAU OF ENGINEERING:

CITY ENGINEER:

UTILITIES

WORLDCOM UTILITY LOCATE 1-800-624-9675
USA NORTH BLUESTAKE 811

PROJECT TOTALS SUMMARY

MATERIALS

2" HDPE CONDUIT(S):	24'
2.5" HDPE CONDUIT(S):	104'
4" HDPE CONDUIT(S):	-
2' x 3' x 2' HANDHOLE(S):	-
2.5' x 5' x 2.5' HANDHOLE(S):	4
4' x 4' x 4' HANDHOLE(S):	-
MANHOLES:	-

WORK TYPE

AERIAL:	-
VZW CONDUIT:	91'
3RD PARTY CONDUIT:	3,913'
TRENCH:	80'
ASPHALT CUT:	-
BORE:	-
BORE/TRENCH:	80'
TOTAL NEW UG FOOTAGE:	80'
TOTAL FOOTAGE:	4,084'

0 10 20 30 40 50
DRAWING SCALE IS IN FEET:
(1"=60' AT 11"x17" print)
(1"=30' AT 24"x36" print)

MCI

PROJECT: 916079, 916078, 916119, 916120, 916121

CELL SITE: LSV WORLD MARKET B

CITY OF LAS VEGAS, NEVADA

CLARIFICATION NO.	QUANTITY

MCI COMMUNICATIONS SERVICES, INC.

OUTSIDE PLANT CONSTRUCTION

TITLE: CELL SITE: LSV WORLD MARKET B

PROJECT TITLE

DATE: 11/14/2018
ENGINEER: BPG DESIGNS
DRAWN BY: PVEGA

REVISIONS

DATE	INITIAL

EXCEPT AS MAY BE OTHERWISE PROVIDED BY CONTRACT, THESE DRAWINGS AND SPECIFICATIONS SHALL REMAIN THE PROPERTY OF MCI COMMUNICATIONS SERVICES, INC. BOTH BEING ISSUED IN STRICT CONFIDENCE AND SHALL NOT BE REPRODUCED, COPIED, OR USED FOR ANY PURPOSE WITHOUT SPECIFIC WRITTEN PERMISSION.

SCALE
HORIZONTAL: 1"=30'
VERTICAL: NA
MP _____ TO MP _____
SHEET 3 OF 14
FILE: LSV WORLD MARKET B_11-14-18

M:\VERIZON ONEFIBER\LAS VEGAS\LSV FOREMASTER\LSV WORLD MARKET B\CONSTRUCTION DRAWINGS

SYMBOLS KEY

EXISTING/PROPOSED

BURIED CABLE

AERIAL CABLE — A

SUBMARINE CABLE — SUBM

FOGWIRE CABLE — FOGW

DIRECT BURIED HDPE — H

PVC OR SPLIT PVC CONDUIT

BSP/GSP OR SPLIT BSP/GSP CONDUIT

STEEL CASING

REMOVE AND RESTORE ASPHALT OR CONCRETE (WIDTH AS INDICATED) — 48"

CORE BORE

JACK AND BORE

DIRECTIONAL BORE — DB

OPEN TRENCH — OT

FUTURE CABLE

REMOVE CABLE — R

TO BE REMOVED OR ABANDONED (SHOWN FOR HDPE) — H

AERIAL UTILITY (ELECTRIC)

UNDERGROUND UTILITY (TELEPHONE)

MAIN TRACKS

AUXILLARY TRACKS

CENTERLINE

RIGHT-OF-WAY

DITCH LINE — D/L

CITY, COUNTY OR STATE BOUNDARY LINE

PROPERTY LINE

BLOCKWALL

FENCE LINE

GUARDRAIL

TOP OF SLOPE

TOE OF SLOPE

EXISTING/PROPOSED

STEEL MARKER AND SIGN-(A)
ALUMINUM "HUB"-STYLE MARKER-(B)
FLAT MARKER-(C)
TUBULAR MARKER-(D)
TUBULAR MARKER, & ISOLATOR PROTECTOR-(E)

STA. MKR. # — (A) (B) (C) (D) (E)

MILE POST MARKER
NOTE:
DASHED = NOT FOUND IN FIELD

21 — STA. STA.

PERMIT TRACKING FORM IDENTIFIER — P.T.F. 187

UTILITY COVER DEPTH — (48")

HANDHOLE, VAULT OR PULLBOX

STREET LIGHT

WOOD POLE & STEEL POLE

ANCHOR ONLY

GUY ONLY

OVERHEAD GUY (ARROW IN DIRECTION OF PULL) — OHG 92' 10M

ANCHOR AND GUY

SIDEWALK ANCHOR AND GUY — P=

FOREIGN ANCHOR AND GUY

PUSH BRACE (EXISTING POLE)

ACCOUNT CODE CHANGE (BURIED TO AERIAL) — 30'-5-84 PB — A

RISER POLE — R

BOND AND GROUND

CULVERT (SIZE AS INDICATED) — B&G — 12"

BRIDGE

METER

VALVE

FIRE HYDRANT

RAILROAD SIGNAL CONTROL BOX

MANHOLE

POTHOLE — PH

MCI

PROJECT: 916079, 916078, 916119, 916120, 916121

CELL SITE: LSV WORLD MARKET B

CITY OF LAS VEGAS, NEVADA

CLARIFICATION NO.	QUANTITY

MCI COMMUNICATIONS SERVICES, INC.

OUTSIDE PLANT CONSTRUCTION

TITLE: CELL SITE: LSV WORLD MARKET B

PROJECT TITLE

DATE: 11/14/2018

DRAWN BY: PVEGA

REVISIONS

DATE	INITIAL

EXCEPT AS MAY BE OTHERWISE PROVIDED BY CONTRACT, THESE DRAWINGS AND SPECIFICATIONS SHALL REMAIN THE PROPERTY OF MCI COMMUNICATIONS SERVICES, INC. BOTH BEING ISSUED IN STRICT CONFIDENCE AND SHALL NOT BE REPRODUCED, COPIED, OR USED FOR ANY PURPOSE WITHOUT SPECIFIC WRITTEN PERMISSION.

SCALE

HORIZONTAL: 1"=30'

VERTICAL: NA

MP ____ TO MP ____

SHEET 4 OF 14

FILE: LSV WORLD MARKET B_11-14-18

M:\VERIZON ONEFIBER\LAS VEGAS\LSV FOREMASTER\LSV WORLD MARKET B\CONSTRUCTION DRAWINGS

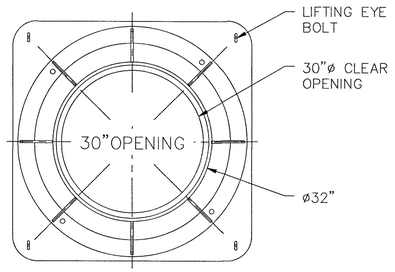

TOP VIEW

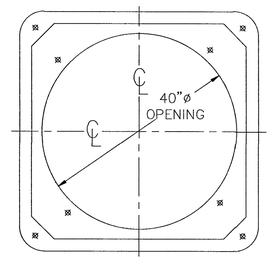

POLYMER CONCRETE ADAPTER
SECTION C–C

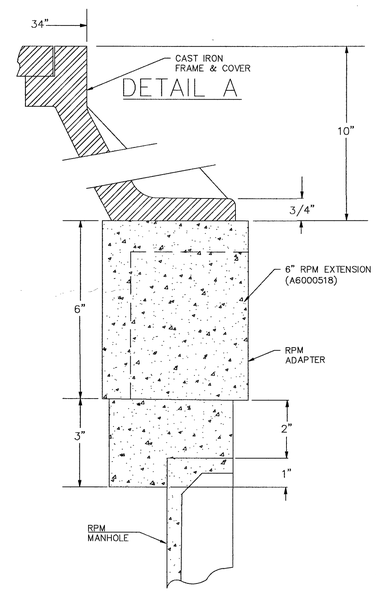

DETAIL B

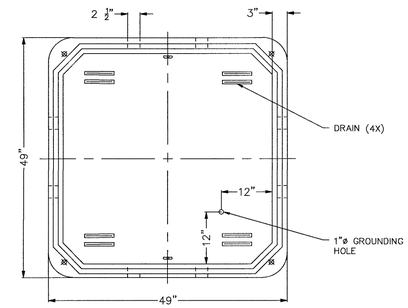

POLYMER CONCRETE MANHOLE
TOP VIEW

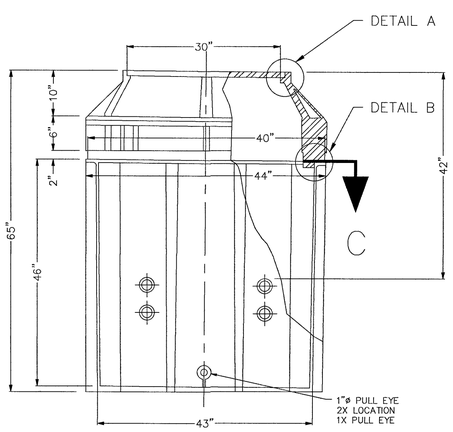

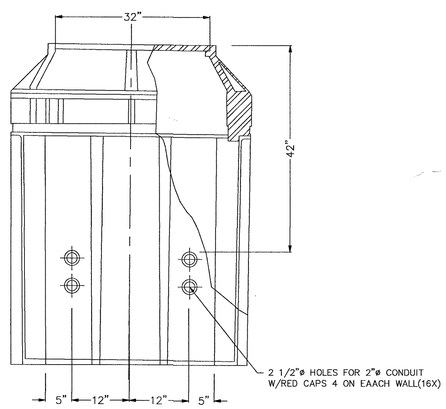

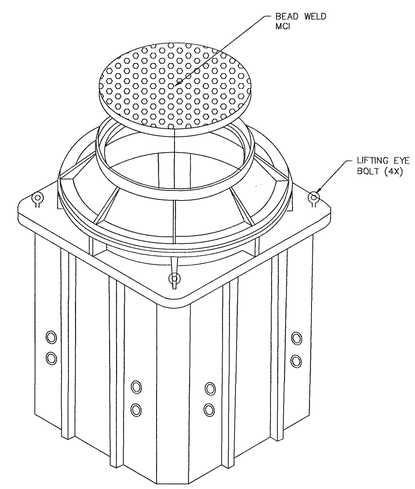

ARMORCAST PRODUCTS COMPANY
13230 SATICOY STREET
NORTH HOLLYWOOD, CA 91605
(818) 982–3500

THE INFORMATION IN THIS DRAWING IS CONFIDENTIAL. THE DRAWING IS NOT TO BE REPRODUCED OR ITS CONTENTS DIVULGED IN ANY WAY WHATSOEVER EXCEPT WITH THE PRIOR WRITTEN APPROVAL OF AMORCAST PRODUCTS COMPANY. IT IS THE PROPERTY OF AND MUST BE RETURNED TO ARMORCAST PRODUCTS COMPANY, 13230 SATICOY STREET, NORTH HOLLYWOOD, CALIFORNIA 91605

PART DESCRIPTIPON: 4'X4'X4' POLYMER CONCRETE MANHOLE ASSEMBLY W/ EXTENSION

CUSTOMER: MCI

DRAWN	DATE	SCALE	MAX LOAD.
GL	8/17	NONE	AASHTO H–20
APPROV.		MATERIAL	DRAWING NUMBER
WS	8/17	FRP,RPM	A6000514HTAPMC13

MCI

PROJECT: 916079, 916078, 916119, 916120, 916121

CELL SITE: LSV WORLD MARKET B

CITY OF LAS VEGAS, NEVADA

CLARIFICATION NO.	QUANTITY

TITLE: CELL SITE: LSV WORLD MARKET B
OUTSIDE PLANT CONSTRUCTION
PROJECT TITLE

DATE: 11/14/2018

DRAWN BY: PVEGA

REVISIONS

DATE	INITIAL

EXCEPT AS MAY BE OTHERWISE PROVIDED BY CONTRACT, THESE DRAWINGS AND SPECIFICATIONS SHALL REMAIN THE PROPERTY OF MCI COMMUNICATIONS SERVICES, INC., BOTH BEING ISSUED IN STRICT CONFIDENCE AND SHALL NOT BE REPRODUCED, COPIED, OR USED FOR ANY PURPOSE WITHOUT SPECIFIC WRITTEN PERMISSION.

SCALE

HORIZONTAL: 1"=30'

VERTICAL: NA

MP _____ TO MP _____

SHEET 5 OF 14

FILE: LSV WORLD MARKET B_11-14-18

M:\VERIZON ONEFIBER\LAS VEGAS\LSV FOREMASTER\LSV WORLD MARKET B\CONSTRUCTION DRAWINGS

2.5' x 5' x 2.5' HANDHOLE DETAILS

DETAIL "A"
EXPLODED ISOMETRIC DETAIL

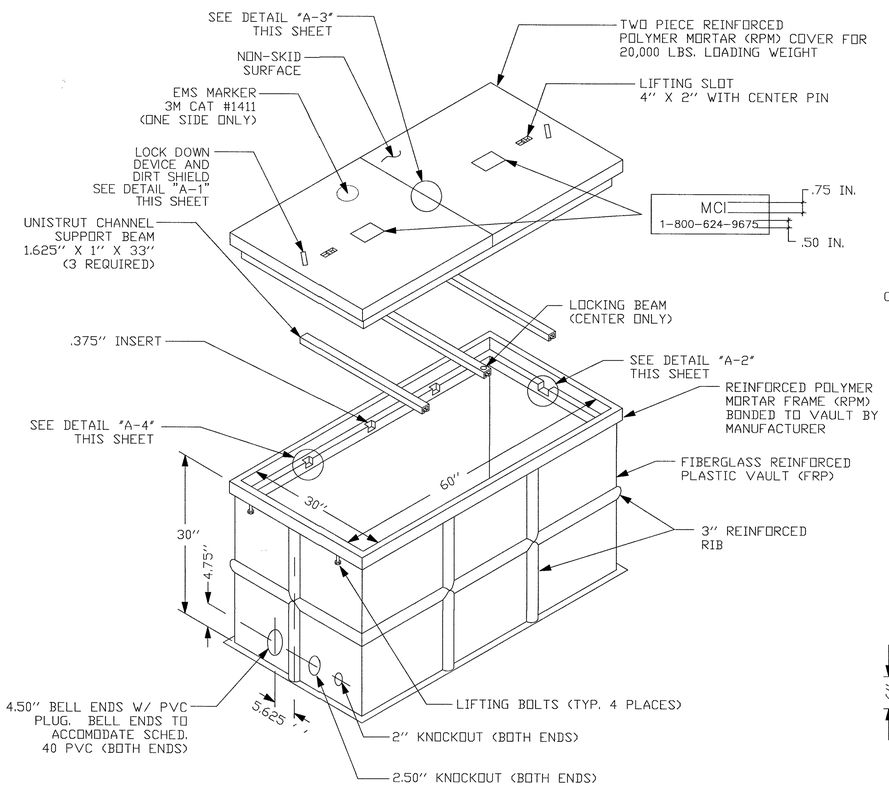

DETAIL "A-1"
LOCK DOWN DEVICE

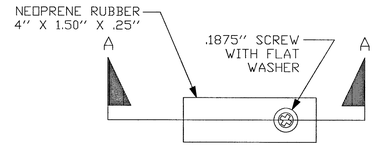

SECTION A-A
LOCKING DEVICE CROSS SECTION

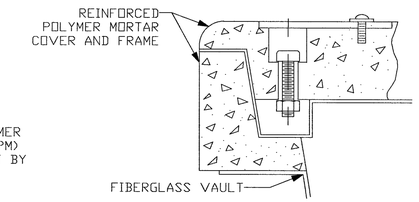

DETAIL "B"
VAULT BOTTOM PLAN VIEW (144 SQ. IN. TOTAL DRAINAGE)

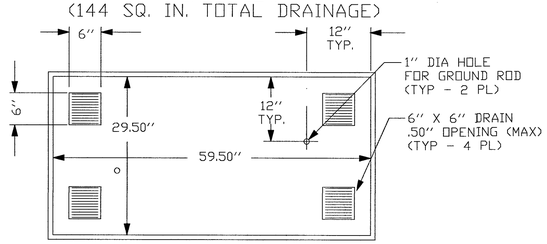

DETAIL "A-2"
ENGAGED LOCK DOWN DEVICE

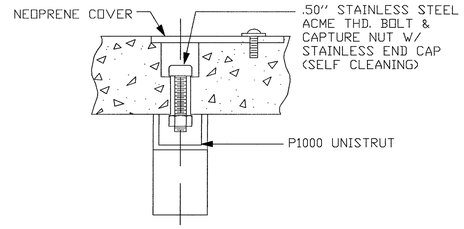

DETAIL "A-3"
COVER HOLD DOWN BRACKET OF 2-PIECE RPM COVER

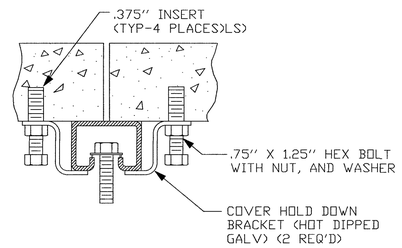

DETAIL "A-4"
SUPPORT BEAM INSTALLATION (TYP. AT 6 PLACES)

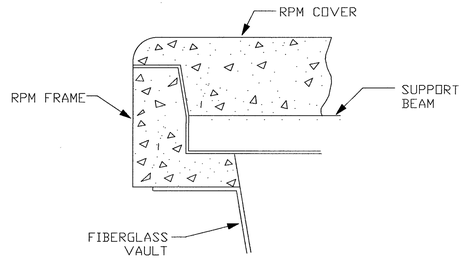

DETAIL "C"
EXCAVATION PIT

PLAN

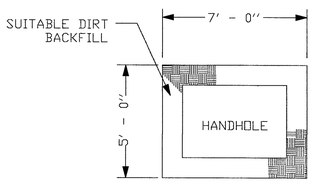

PROFILE

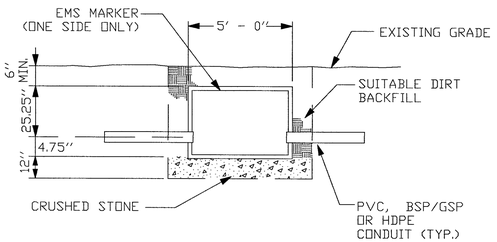

DETAIL "D"
SIDE WALL VIEW INSIDE LOOKING OUT

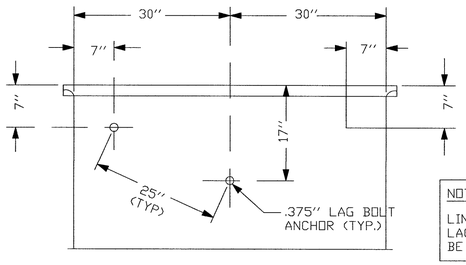

NOTE:

LINEAR DISTANCE BETWEEN LAG BOLT ANCHORS MUST BE 25".

NOTES:

1. VOID IN EXCAVATED AREAS TO BE BACKFILLED WITH SELECT MATERIAL.
2. BOTTOM OF EXCAVATED PIT TO BE BACKFILLED WITH 12" OF CRUSHED STONE (.75" GRADE).
3. SHORING WILL BE REQUIRED.
4. ALL HANDHOLES SHALL BE PLACED BELOW EXISTING GRADE.
5. THIS HANDHOLE IS OF FIBERGLASS MATERIAL, APROXIMATELY POUNDS IN WEIGHT. THE LIDS ARE POLYMER CONCRETE MATERIAL, EACH APPROXIMATELY POUNDS.

MCI

PROJECT: 916079, 916078, 916119, 916120, 916121

CELL SITE: LSV WORLD MARKET B

CITY OF LAS VEGAS, NEVADA

CLARIFICATION NO.	QUANTITY

MCI COMMUNICATIONS SERVICES, INC.

OUTSIDE PLANT CONSTRUCTION

TITLE: CELL SITE: LSV WORLD MARKET B

PROJECT TITLE

DATE: 11/14/2018

DRAWN BY: PVEGA

REVISIONS

DATE	INITIAL

EXCEPT AS MAY BE OTHERWISE PROVIDED BY CONTRACT, THESE DRAWINGS AND SPECIFICATIONS SHALL REMAIN THE PROPERTY OF MCI COMMUNICATIONS SERVICES, INC. BOTH BEING ISSUED IN STRICT CONFIDENCE AND SHALL NOT BE REPRODUCED, COPIED, OR USED FOR ANY PURPOSE WITHOUT SPECIFIC WRITTEN PERMISSION.

SCALE

HORIZONTAL: 1"=30'

VERTICAL: NA

MP TO MP

SHEET 6 OF 14

FILE: LSV WORLD MARKET B_11-14-18

M:\VERIZON ONEFIBER\LAS VEGAS\LSV FOREMASTER\LSV WORLD MARKET B\CONSTRUCTION DRAWINGS

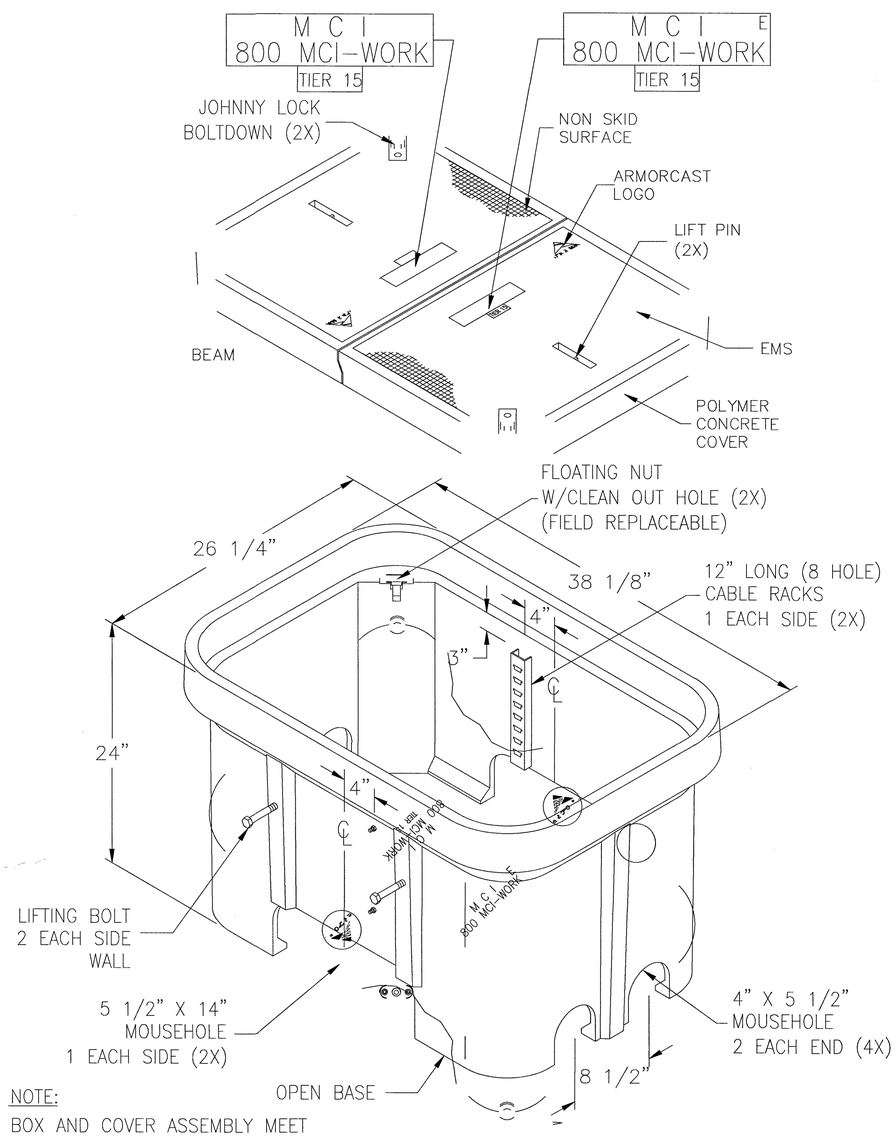

NOTE:

BOX AND COVER ASSEMBLY MEET ANSI/SCTE 77 TIER 15 LOADING

FILE # A6-1974TAPMCI3

13230 Saticoy Street,
North Hollywood, CA 91605
(818) 982-3600

ARMORCAST® PRODUCTS COMPANY

"THE INFORMATION IN THIS DRAWING IS CONFIDENTIAL. THE DRAWING IS NOT TO BE REPRODUCED OR ITS CONTENTS DIVULGED IN ANY WAY WHATSOEVER EXCEPT WITH THE PRIOR WRITTEN APPROVAL OF ARMORCAST PRODUCTS COMPANY. IT IS THE PROPERTY OF AND MUST BE RETURNED TO ARMORCAST PRODUCTS COMPANY, 13230 SATICOY STREET, NORTH HOLLYWOOD, CALIFORNIA 91605."

PART DESCRIPTION			
24" X 36" X 24" POLYMER CONCRETE BOX ASSEMBLY			
CUSTOMER: VERIZON			
DRAWN: GL	DATE: 6/17	SCALE: NONE	MAX. LOAD: TIER 15
APROV.: WS	6/17	MATERIAL: POLYMER CONCRETE	DRAWING NUMBER: A6001974TAPMCI3

TYPE B - KEYHOLE REPAIR
REQUIRED FOR ROW WIDTH GREATER THAN 60'
OPTIONAL FOR ROW WIDTH 60' OR LESS

NOTES:

1. CUT AND REMOVE PAVEMENT PLUG WITH AN APPROVED KEYHOLE CORING DEVICE. PAVEMENT TO BE CORED SHALL CONTAIN NO CRACKS AND SHALL BE AT LEAST 4" THICK. IF PLUG IS DAMAGED OR IS LESS THAN 4" THICK, REPLACE PLUG WITH A "FARMED" ASPHALT PLUG FROM AN APPROVED SITE. FARMED PLUGS SHALL BE AT LEAST 4" THICK AND AT LEAST ONE INCH THICKER THAN EXISTING ASPHALT.
2. BONDING MATERIAL SHALL BE A SINGLE COMPONENT CEMENTITIOUS RAPID HARDENING, HIGH STRENGTH, WATERPROOF BONDING AGENT THAT ALLOWS THE CORE TO SUPPORT AT LEAST THREE TIMES AASHTO H-25 LOADING WITHIN 30 MINUTES OF APPLICATION. BOND AGENT MUST SHOW A MINIMUM 20 PSI BOND STRENGTH (ASTM C882) AND A MINIMUM 200 PSI COMPRESSIVE STRENGTH (ASTM C109) IN 30 MINUTES.
3. AGENCY-APPROVED BACKFILL BELOW REPAIR SHALL BE PER SECTION 215.
4. FILL KEYHOLE WITH BONDING MATERIAL DURING REPAIR.
5. PRIOR AGENCY APPROVAL IS REQUIRED FOR MULTIPLE KEYHOLE REPAIRS WITHIN A GIVEN ROADWAY SEGMENT.
6. A 5 YEAR WARRANTY IS REQUIRED ON ALL REPAIRS.

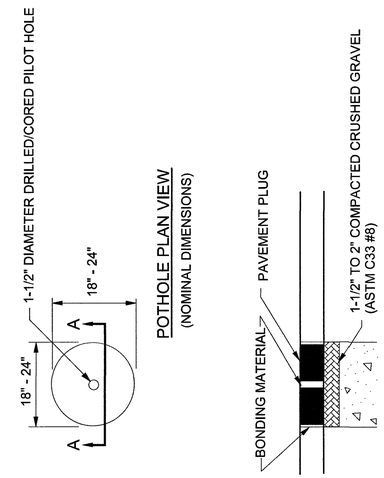

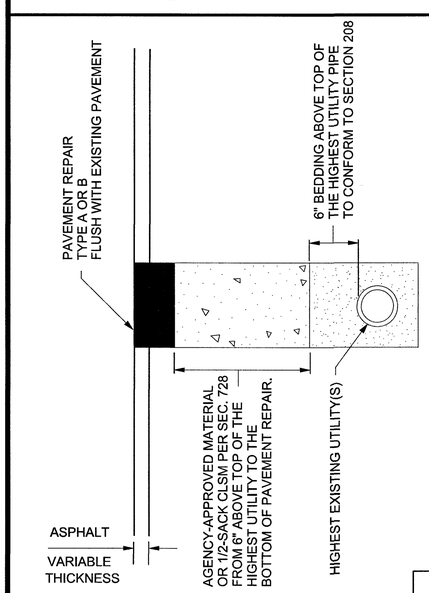

SECTION A-A

TYPE A - CUT & PATCH REPAIR
OPTIONAL FOR ROW WIDTH 60' OR LESS

NOTE: EDGES SHALL BE CUT TO A NEAT VERTICAL FACE.

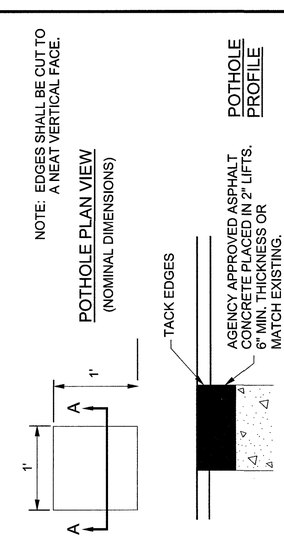

AGENCY APPROVED	B	C	H	L	M	N

SPECIFICATION REFERENCE	
215	KEYHOLE POTHOLE EXCAVATION
	AND BACKFILL

UNIFORM STANDARD DRAWINGS
CLARK COUNTY AREA

UTILITY POTHOLE REPAIR

DATE 01-01-12 | DWG. NO. 506

MCI

PROJECT: 916079, 916078, 916119, 916120, 916121

CELL SITE: LSV WORLD MARKET B

CITY OF LAS VEGAS, NEVADA

CLARIFICATION NO.	QUANTITY

MCI COMMUNICATIONS SERVICES, INC.

OUTSIDE PLANT CONSTRUCTION

TITLE: CELL SITE: LSV WORLD MARKET B

PROJECT TITLE

DATE: 11/14/2018

DRAWN BY: PVEGA

REVISIONS

DATE	INITIAL

EXCEPT AS MAY BE OTHERWISE PROVIDED BY CONTRACT, THESE DRAWINGS AND SPECIFICATIONS SHALL REMAIN THE PROPERTY OF MCI COMMUNICATIONS SERVICES, INC. BOTH BEING ISSUED IN STRICT CONFIDENCE AND SHALL NOT BE REPRODUCED, COPIED, OR USED FOR ANY PURPOSE WITHOUT SPECIFIC WRITTEN PERMISSION.

SCALE

HORIZONTAL: 1"=30'

VERTICAL: NA

MP ____ TO MP ____

SHEET 7 OF 14

FILE: LSV WORLD MARKET B_11-14-18

M:\VERIZON ONEFIBER\LAS VEGAS\LSV FOREMASTER\LSV WORLD MARKET B\CONSTRUCTION DRAWINGS

CONSTRUCTION DRAWING

CITY OF LAS VEGAS, NEVADA

60 30 0 60

DRAWING SCALE IS IN FEET:
1"=60' AT 11"x17" print 1"=30' AT 24"x36" print

NORTH

Call at least two full working days before you begin excavation.

811 Know what's below. Call 811 before you dig.

DETAIL "A"
N.T.S.

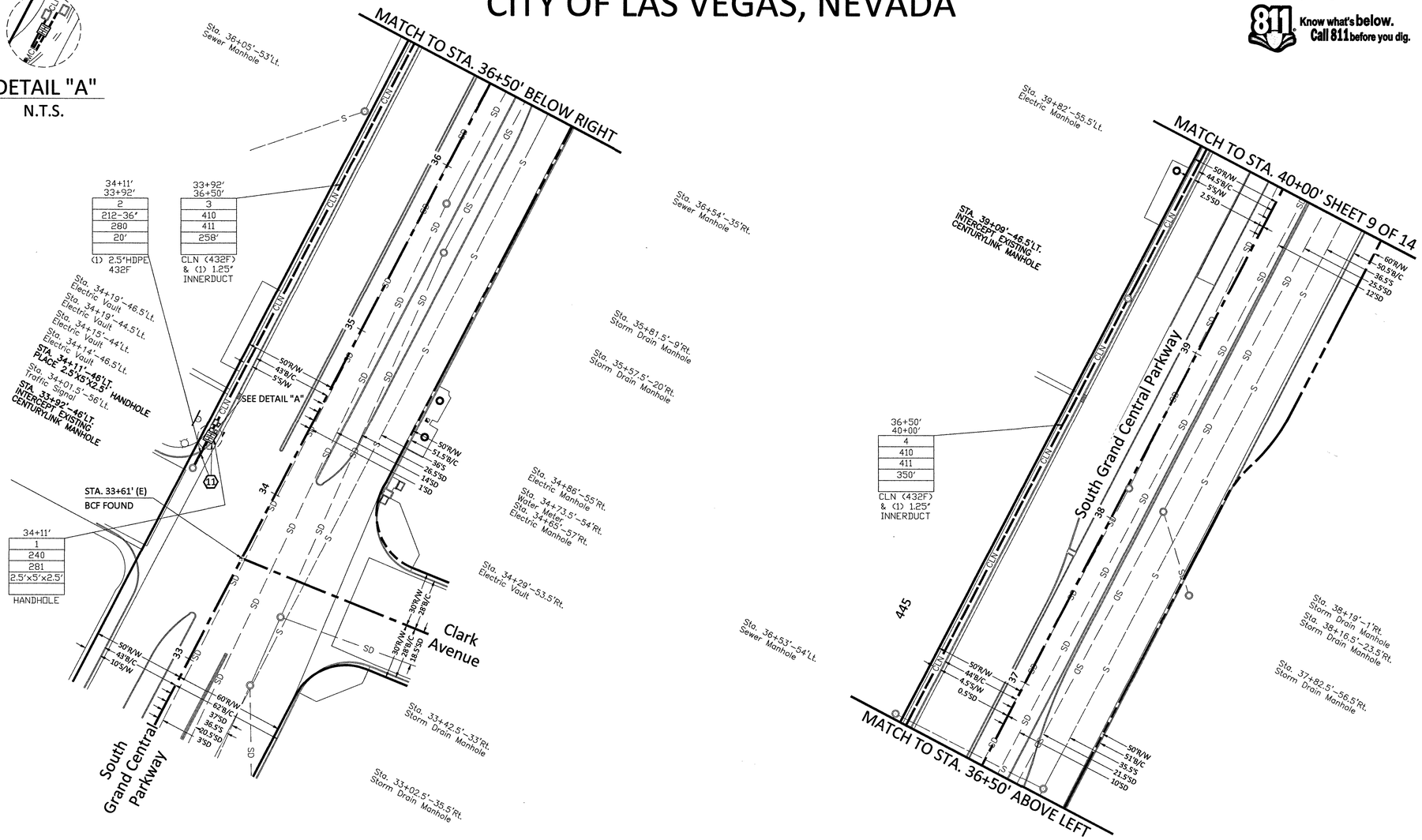

RTC NOTES:

BACKFILL AND RIGHT OF WAY RESTORATION SHALL CONFORM TO CLARK COUNTY UNIFORM STANDARD DRAWINGS

1	500.1	0 TO 5 YEARS PAVEMENT RESTORATION LONGITUDINAL CUT
2	500.2	0 TO 5 YEARS PAVEMENT RESTORATION TRAVERSE CUT
3	500.3	OVER 5 YEARS PAVEMENT RESTORATION LONGITUDINAL CUT. GREATER THAN 60' R.O.W
4	500.4	OVER 5 YEARS PAVEMENT RESTORATION LONGITUDINAL CUT. 60' R.O.W OR LESS
5	500.5	OVER 5 YEARS PAVEMENT RESTORATION TRAVERSE ALL R.O.W WIDTHS
6	501	TYPICAL UNDERGROUND UTILITY LOCATIONS IN RESIDENTIAL STREETS 60' OR LESS R.O.W
7	501.1	TYPICAL UTILITY UNDERGROUND LOCATIONS IN STREETS WITH GREATER THAN 60' R.O.W
8	503	METHOD B FOR RIGID AND FLEXIBLE PIPE TRENCH BACKFILL - PAVED AREAS
9	503.1	METHOD A FOR FLEXIBLE PIPE TRENCH BACKFILL - PAVED AREAS
10	503.2	METHOD A FOR RIGID PIPE TRENCH BACKFILL - PAVED AREAS
11	234	SIDEWALK
12		BACKFILL IN UNPAVED AREA AS REQUIRED BY LOCAL CODE OR AS APPROVED BY AGENCY.

210	PLACE CONDUIT
212	PLACE HIGH DENSITY POLYETHYLENE (HDPE)
240	PLACE HANDHOLE
250	PLACE MANHOLE
270	REMOVE AND RESTORE ASPHALT
280	REMOVE AND RESTORE CONCRETE
281	REMOVE AND RESTORE SIDEWALK
282	REMOVE AND RESTORE CURBING
410	PULL CABLE
411	PULL THROUGH DUCT (INNERDUCT)
520	PLACE AERIAL CABLE
630	DIRECTIONAL BORE

TRENCH DETAIL

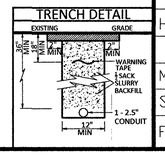

MCI

PROJECT: 916079, 916078, 916119, 916120, 916121

CELL SITE: LSV WORLD MARKET B – 02-27-19
CITY OF LAS VEGAS, NEVADA

CLARIFICATION NO.	QUANTITY
SHEET TOTAL	
2" HDPE CONDUIT:	6'
2.5" HDPE CONDUIT:	20'
4" HDPE CONDUIT:	-
2' x 3' x 2' HANDHOLE(S):	-
2.5' x 5' x 2.5'HANDHOLE(S):	1
4' x 5' x 4'HANDHOLE(S):	-
MANHOLE(S):	-
AERIAL:	-
VZW CONDUIT:	-
3RD PARTY CONDUIT:	608'
TRENCH:	20'
TOTAL NEW UG FOOTAGE:	20'
TOTAL FOOTAGE:	628'

MCI COMMUNICATIONS SERVICES, INC.

OUTSIDE PLANT CONSTRUCTION

TITLE: CELL SITE: LSV WORLD MARKET B - 02-27-19

DATE: 2/27/2019

DRAWN BY: CMENDOZA

REVISIONS

DATE	INITIAL

EXCEPT AS MAY BE OTHERWISE PROVIDED BY CONTRACT, THESE DRAWINGS AND SPECIFICATIONS SHALL REMAIN THE PROPERTY OF MCI COMMUNICATIONS SERVICES, INC. BOTH BEING ISSUED IN STRICT CONFIDENCE AND SHALL NOT BE REPRODUCED, COPIED, OR USED FOR ANY PURPOSE WITHOUT SPECIFIC WRITTEN PERMISSION.

SCALE

HORIZONTAL: 1"=30'

VERTICAL: NA

MP ____ TO MP ____

SHEET 8 OF 14

FILE: LSV WORLD MARKET B - 02-27-19

M:\VERIZON ONEFIBER\LAS VEGAS\LSV FOREMASTER\LSV WORLD MARKET B\CONSTRUCTION DRAWINGS

CONSTRUCTION DRAWING

CITY OF LAS VEGAS, NEVADA

60 30 0 60

DRAWING SCALE IS IN FEET:
1"=60' AT 11"x17" print 1"=30' AT 24"x36" print

NORTH

Call at least two full working days before you begin excavation.

811 Know what's below. Call 811 before you dig.

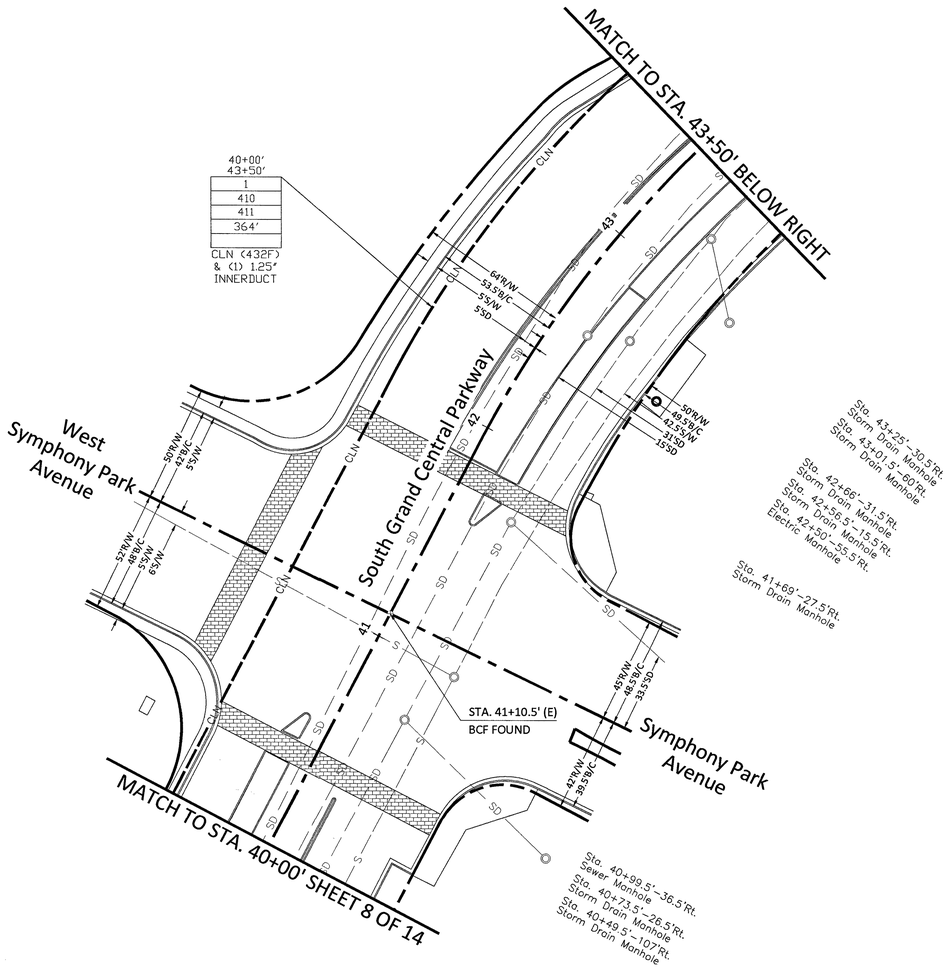

DETAIL "A"
N.T.S.

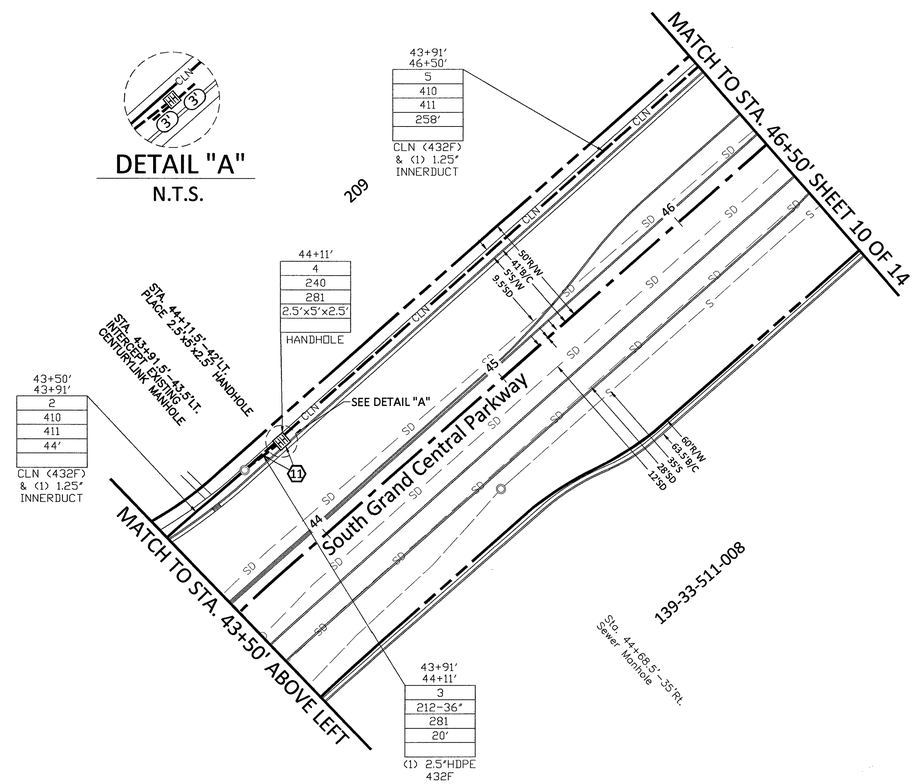

RTC NOTES:

BACKFILL AND RIGHT OF WAY RESTORATION SHALL CONFORM TO CLARK COUNTY UNIFORM STANDARD DRAWINGS

1	500.1	0 TO 5 YEARS PAVEMENT RESTORATION LONGITUDINAL CUT
2	500.2	0 TO 5 YEARS PAVEMENT RESTORATION TRAVERSE CUT
3	500.3	OVER 5 YEARS PAVEMENT RESTORATION LONGITUDINAL CUT. GREATER THAN 60' R.O.W
4	500.4	OVER 5 YEARS PAVEMENT RESTORATION LONGITUDINAL CUT. 60' R.O.W OR LESS
5	500.5	OVER 5 YEARS PAVEMENT RESTORATION TRAVERSE ALL R.O.W WIDTHS
6	501	TYPICAL UNDERGROUND UTILITY LOCATIONS IN RESIDENTIAL STREETS 60' OR LESS R.O.W
7	501.1	TYPICAL UTILITY UNDERGROUND LOCATIONS IN STREETS WITH GREATER THAN 60' R.O.W
8	503	METHOD B FOR RIGID AND FLEXIBLE PIPE TRENCH BACKFILL - PAVED AREAS
9	503.1	METHOD A FOR FLEXIBLE PIPE TRENCH BACKFILL - PAVED AREAS
10	503.2	METHOD A FOR RIGID PIPE TRENCH BACKFILL - PAVED AREAS
11	234	SIDEWALK
12	BACKFILL IN UNPAVED AREA AS REQUIRED BY LOCAL CODE OR AS APPROVED BY AGENCY.	

210	PLACE CONDUIT
212	PLACE HIGH DENSITY POLYETHYLENE (HDPE)
240	PLACE HANDHOLE
250	PLACE MANHOLE
270	REMOVE AND RESTORE ASPHALT
280	REMOVE AND RESTORE CONCRETE
281	REMOVE AND RESTORE SIDEWALK
282	REMOVE AND RESTORE CURBING
410	PULL CABLE
411	PULL THROUGH DUCT (INNERDUCT)
520	PLACE AERIAL CABLE
630	DIRECTIONAL BORE

TRENCH DETAIL

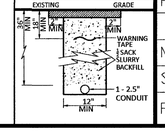

MCI

PROJECT: 916079, 916078, 916119, 916120, 916121

CELL SITE: LSV WORLD MARKET B

CITY OF LAS VEGAS, NEVADA

CLARIFICATION NO.	QUANTITY
SHEET TOTAL	
2" HDPE CONDUIT:	6'
2.5" HDPE CONDUIT:	20'
4" HDPE CONDUIT:	-
2' x 3' x 2' HANDHOLE(S):	-
2.5' x 5' x 2.5'HANDHOLE(S):	1
4' x 5' x 4'HANDHOLE(S):	-
MANHOLE(S):	-
AERIAL:	-
VZW CONDUIT:	-
3RD PARTY CONDUIT:	666'
TRENCH:	20'
TOTAL NEW UG FOOTAGE:	20'
TOTAL FOOTAGE:	686'

MCI COMMUNICATIONS SERVICES, INC.

OUTSIDE PLANT CONSTRUCTION

TITLE: CELL SITE: LSV WORLD MARKET B

DATE: 11/14/2018

DRAWN BY: PVEGA

REVISIONS

DATE	INITIAL

EXCEPT AS MAY BE OTHERWISE PROVIDED BY CONTRACT, THESE DRAWINGS AND SPECIFICATIONS SHALL REMAIN THE PROPERTY OF MCI COMMUNICATIONS SERVICES, INC. BOTH BEING ISSUED IN STRICT CONFIDENCE AND SHALL NOT BE REPRODUCED, COPIED, OR USED FOR ANY PURPOSE WITHOUT SPECIFIC WRITTEN PERMISSION.

SCALE

HORIZONTAL: 1"=30'

VERTICAL: NA

MP ____ TO MP ____

SHEET 9 OF 14

FILE: LSV WORLD MARKET B_11-14-18

M:\VERIZON ONEFIBER\LAS VEGAS\LSV FOREMASTER\LSV WORLD MARKET B\CONSTRUCTION DRAWINGS

CONSTRUCTION DRAWING

CITY OF LAS VEGAS, NEVADA

60 30 0 60

DRAWING SCALE IS IN FEET:
1"=60' AT 11"x17" print 1"=30' AT 24"x36" print

NORTH

Call at least two full working days before you begin excavation.

811 Know what's below. Call 811 before you dig.

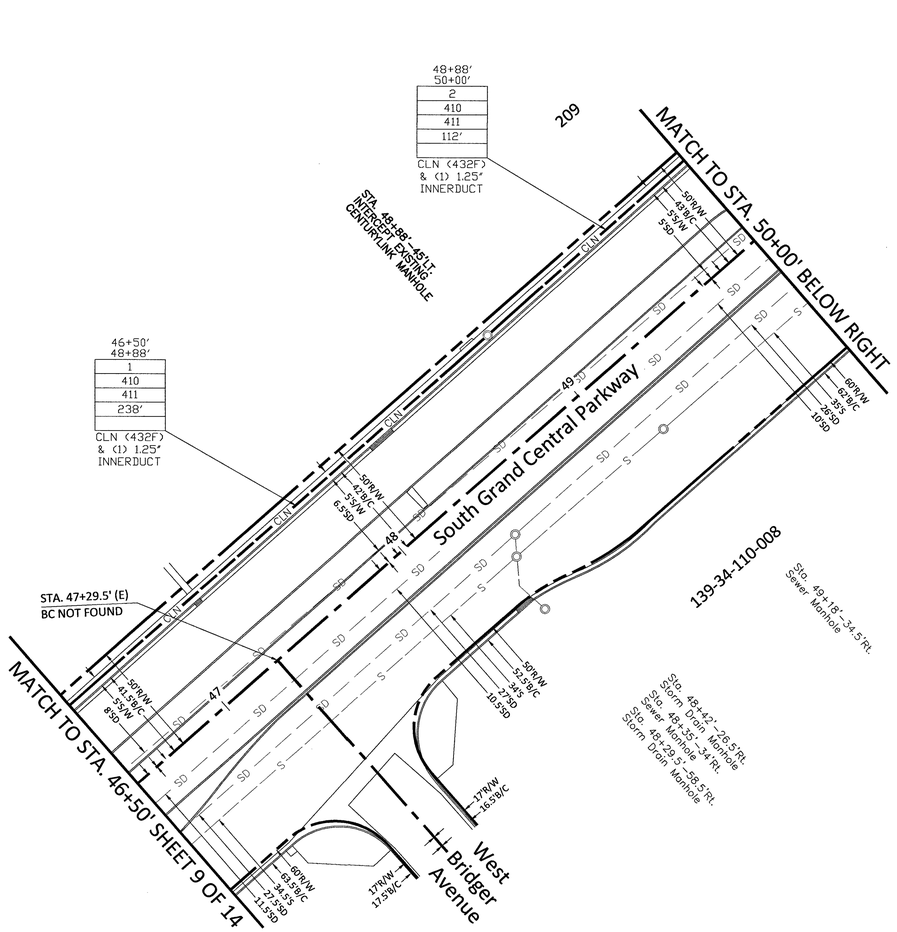

DETAIL "A"
N.T.S.

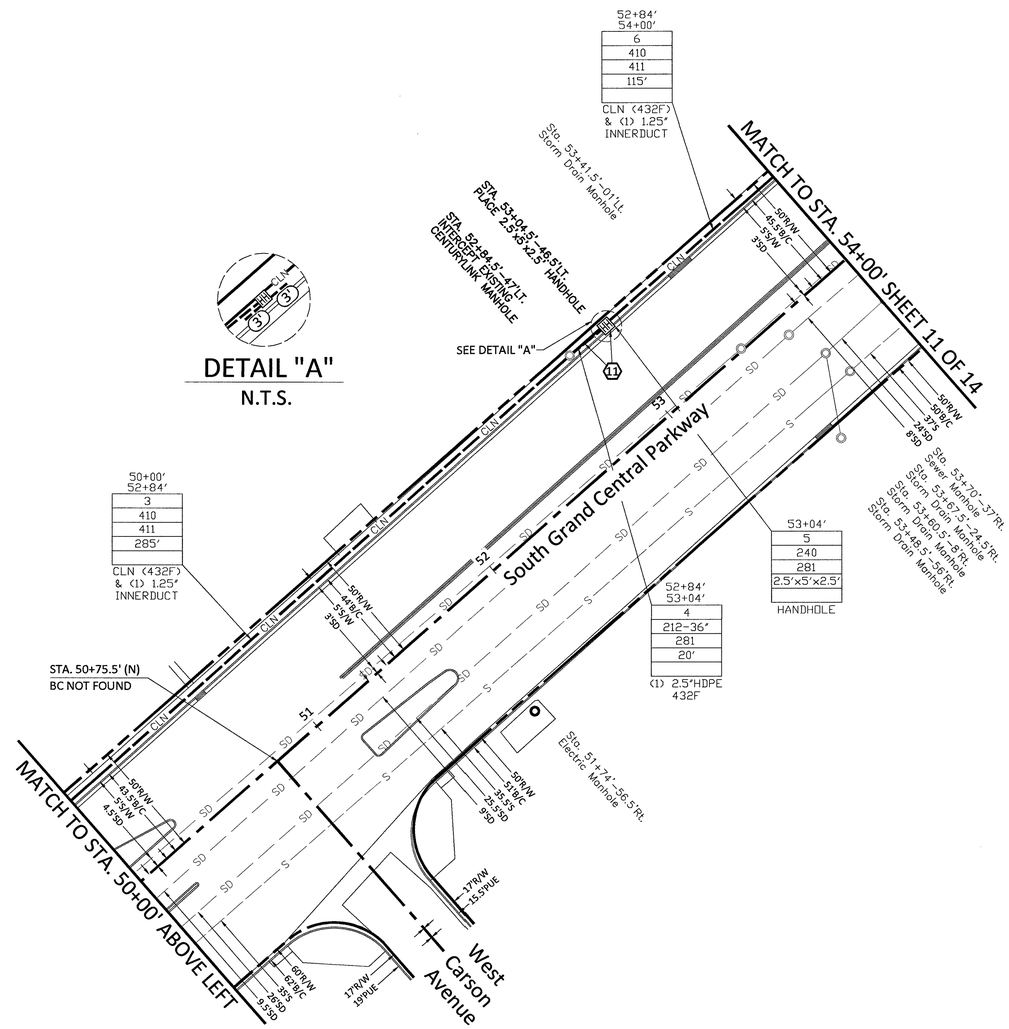

RTC NOTES:

BACKFILL AND RIGHT OF WAY RESTORATION SHALL CONFORM TO CLARK COUNTY UNIFORM STANDARD DRAWINGS

1	500.1	0 TO 5 YEARS PAVEMENT RESTORATION LONGITUDINAL CUT
2	500.2	0 TO 5 YEARS PAVEMENT RESTORATION TRAVERSE CUT
3	500.3	OVER 5 YEARS PAVEMENT RESTORATION LONGITUDINAL CUT. GREATER THAN 60' R.O.W
4	500.4	OVER 5 YEARS PAVEMENT RESTORATION LONGITUDINAL CUT. 60' R.O.W OR LESS
5	500.5	OVER 5 YEARS PAVEMENT RESTORATION TRAVERSE ALL R.O.W WIDTHS
6	501	TYPICAL UNDERGROUND UTILITY LOCATIONS IN RESIDENTIAL STREETS 60' OR LESS R.O.W
7	501.1	TYPICAL UTILITY UNDERGROUND LOCATIONS IN STREETS WITH GREATER THAN 60' R.O.W
8	503	METHOD B FOR RIGID AND FLEXIBLE PIPE TRENCH BACKFILL - PAVED AREAS
9	503.1	METHOD A FOR FLEXIBLE PIPE TRENCH BACKFILL - PAVED AREAS
10	503.2	METHOD A FOR RIGID PIPE TRENCH BACKFILL - PAVED AREAS
11	234	SIDEWALK
12	BACKFILL IN UNPAVED AREA AS REQUIRED BY LOCAL CODE OR AS APPROVED BY AGENCY.	

210	PLACE CONDUIT
212	PLACE HIGH DENSITY POLYETHYLENE (HDPE)
240	PLACE HANDHOLE
250	PLACE MANHOLE
270	REMOVE AND RESTORE ASPHALT
280	REMOVE AND RESTORE CONCRETE
281	REMOVE AND RESTORE SIDEWALK
282	REMOVE AND RESTORE CURBING
410	PULL CABLE
411	PULL THROUGH DUCT (INNERDUCT)
520	PLACE AERIAL CABLE
630	DIRECTIONAL BORE

TRENCH DETAIL

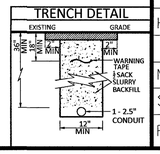

MCI

PROJECT: 916079, 916078, 916119, 916120, 916121

CELL SITE: LSV WORLD MARKET B

CITY OF LAS VEGAS, NEVADA

CLARIFICATION NO.	QUANTITY
SHEET TOTAL	
2" HDPE CONDUIT:	6'
2.5" HDPE CONDUIT:	20'
4" HDPE CONDUIT:	-
2' x 3' x 2' HANDHOLE(S):	-
2.5' x 5' x 2.5'HANDHOLE(S):	1
4' x 5' x 4'HANDHOLE(S):	-
MANHOLE(S):	-
AERIAL:	-
VZW CONDUIT:	-
3RD PARTY CONDUIT:	750'
TRENCH:	-
TOTAL NEW UG FOOTAGE:	20'
TOTAL FOOTAGE:	770'

MCI
COMMUNICATIONS SERVICES, INC.
OUTSIDE PLANT CONSTRUCTION
TITLE: CELL SITE: LSV WORLD MARKET B

DATE: 11/14/2018

DRAWN BY: PVEGA

REVISIONS

DATE	INITIAL

EXCEPT AS MAY BE OTHERWISE PROVIDED BY CONTRACT, THESE DRAWINGS AND SPECIFICATIONS SHALL REMAIN THE PROPERTY OF MCI COMMUNICATIONS SERVICES, INC. BOTH BEING ISSUED IN STRICT CONFIDENCE AND SHALL NOT BE REPRODUCED, COPIED, OR USED FOR ANY PURPOSE WITHOUT SPECIFIC WRITTEN PERMISSION.

SCALE

HORIZONTAL: 1"=30'

VERTICAL: NA

MP ____ TO MP ____

SHEET 10 OF 14

FILE: LSV WORLD MARKET B_11-14-18

M:\VERIZON ONEFIBER\LAS VEGAS\LSV FOREMASTER\LSV WORLD MARKET B\CONSTRUCTION DRAWINGS

CONSTRUCTION DRAWING

CITY OF LAS VEGAS, NEVADA

60 30 0 60

DRAWING SCALE IS IN FEET:
1"=60' AT 11"x17" print 1"=30' AT 24"x36" print

NORTH

Call at least two full working days before you begin excavation.

811 Know what's below. Call 811 before you dig.

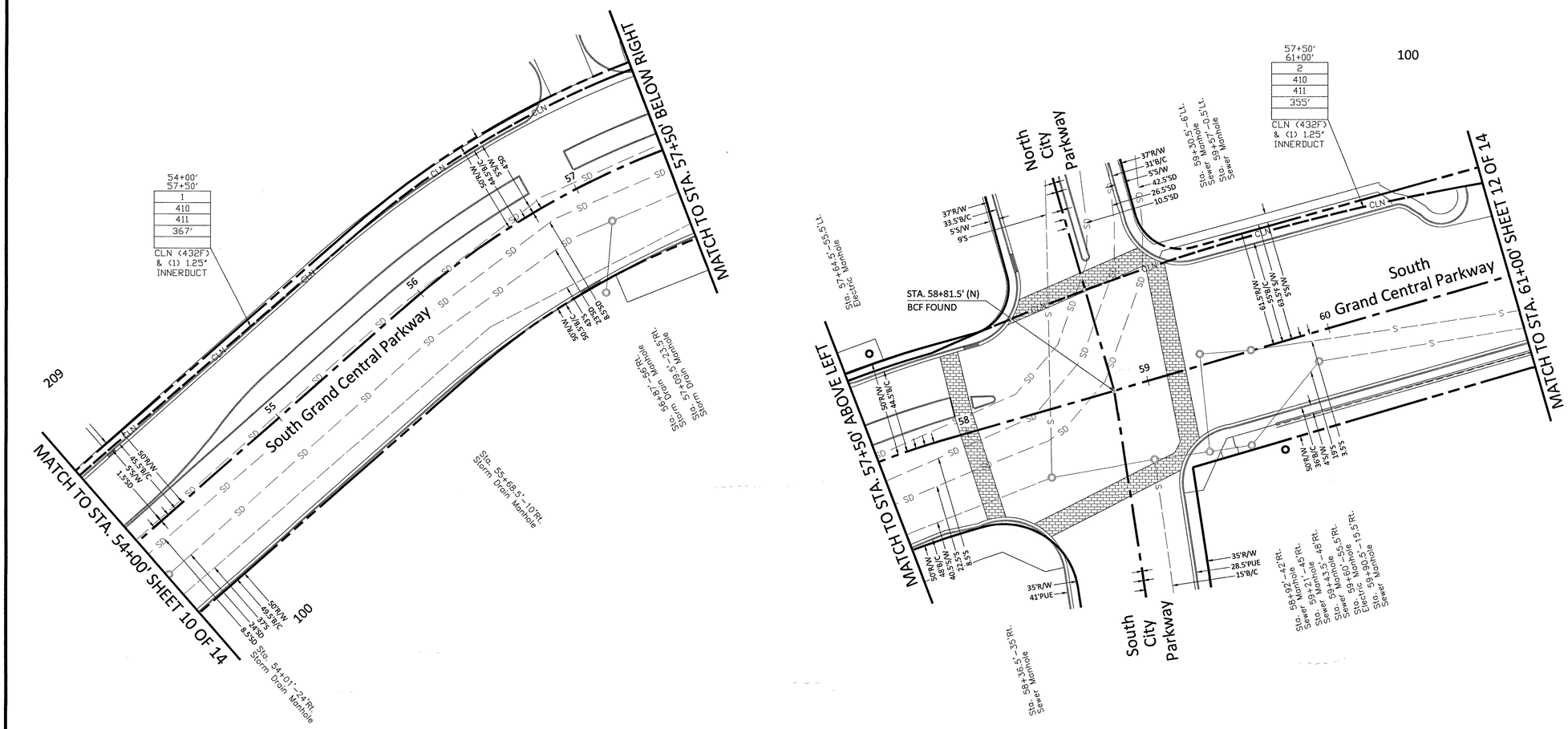

RTC NOTES:

BACKFILL AND RIGHT OF WAY RESTORATION SHALL CONFORM TO CLARK COUNTY UNIFORM STANDARD DRAWINGS

1	500.1	0 TO 5 YEARS PAVEMENT RESTORATION LONGITUDINAL CUT
2	500.2	0 TO 5 YEARS PAVEMENT RESTORATION TRAVERSE CUT
3	500.3	OVER 5 YEARS PAVEMENT RESTORATION LONGITUDINAL CUT. GREATER THAN 60' R.O.W
4	500.4	OVER 5 YEARS PAVEMENT RESTORATION LONGITUDINAL CUT. 60' R.O.W OR LESS
5	500.5	OVER 5 YEARS PAVEMENT RESTORATION TRAVERSE ALL R.O.W WIDTHS
6	501	TYPICAL UNDERGROUND UTILITY LOCATIONS IN RESIDENTIAL STREETS 60' OR LESS R.O.W
7	501.1	TYPICAL UTILITY UNDERGROUND LOCATIONS IN STREETS WITH GREATER THAN 60' R.O.W
8	503	METHOD B FOR RIGID AND FLEXIBLE PIPE TRENCH BACKFILL - PAVED AREAS
9	503.1	METHOD A FOR FLEXIBLE PIPE TRENCH BACKFILL - PAVED AREAS
10	503.2	METHOD A FOR RIGID PIPE TRENCH BACKFILL - PAVED AREAS
11	234	SIDEWALK
12	BACKFILL IN UNPAVED AREA AS REQUIRED BY LOCAL CODE OR AS APPROVED BY AGENCY.	

210	PLACE CONDUIT
212	PLACE HIGH DENSITY POLYETHYLENE (HDPE)
240	PLACE HANDHOLE
250	PLACE MANHOLE
270	REMOVE AND RESTORE ASPHALT
280	REMOVE AND RESTORE CONCRETE
281	REMOVE AND RESTORE SIDEWALK
282	REMOVE AND RESTORE CURBING
410	PULL CABLE
411	PULL THROUGH DUCT (INNERDUCT)
520	PLACE AERIAL CABLE
630	DIRECTIONAL BORE

MCI

PROJECT: 916079, 916078, 916119, 916120, 916121

CELL SITE: LSV WORLD MARKET B

CITY OF LAS VEGAS, NEVADA

CLARIFICATION NO. QUANTITY	
SHEET TOTAL	
2" HDPE CONDUIT:	-
4" HDPE CONDUIT:	-
2' x 3' x 2' HANDHOLE(S):	-
2.5' x 5' x 2.5'HANDHOLE(S):	-
4' x 5' x 4'HANDHOLE(S):	-
MANHOLE(S):	-
AERIAL:	-
VZW CONDUIT:	-
3RD PARTY CONDUIT:	722'
TRENCH:	-
TOTAL NEW UG FOOTAGE:	-
TOTAL FOOTAGE:	722'

MCI COMMUNICATIONS SERVICES, INC.

OUTSIDE PLANT CONSTRUCTION

TITLE: CELL SITE: LSV WORLD MARKET B

DATE: 11/14/2018

DRAWN BY: PVEGA

REVISIONS

DATE	INITIAL

EXCEPT AS MAY BE OTHERWISE PROVIDED BY CONTRACT, THESE DRAWINGS AND SPECIFICATIONS SHALL REMAIN THE PROPERTY OF MCI COMMUNICATIONS SERVICES, INC., BOTH BEING ISSUED IN STRICT CONFIDENCE AND SHALL NOT BE REPRODUCED, COPIED, OR USED FOR ANY PURPOSE WITHOUT SPECIFIC WRITTEN PERMISSION.

SCALE

HORIZONTAL: 1"=30'

VERTICAL: NA

MP TO MP

SHEET 11 OF 14

FILE: LSV WORLD MARKET B_11-14-18

M:\VERIZON ONEFIBER\LAS VEGAS\LSV FOREMASTER\LSV WORLD MARKET B\CONSTRUCTION DRAWINGS

CONSTRUCTION DRAWING

CITY OF LAS VEGAS, NEVADA

60 30 0 60

DRAWING SCALE IS IN FEET:
1"=60' AT 11"x17" print 1"=30' AT 24"x36" print

NORTH

Call at least two full working days before you begin excavation.

811 Know what's below. Call 811 before you dig.

DETAIL "A"
N.T.S.

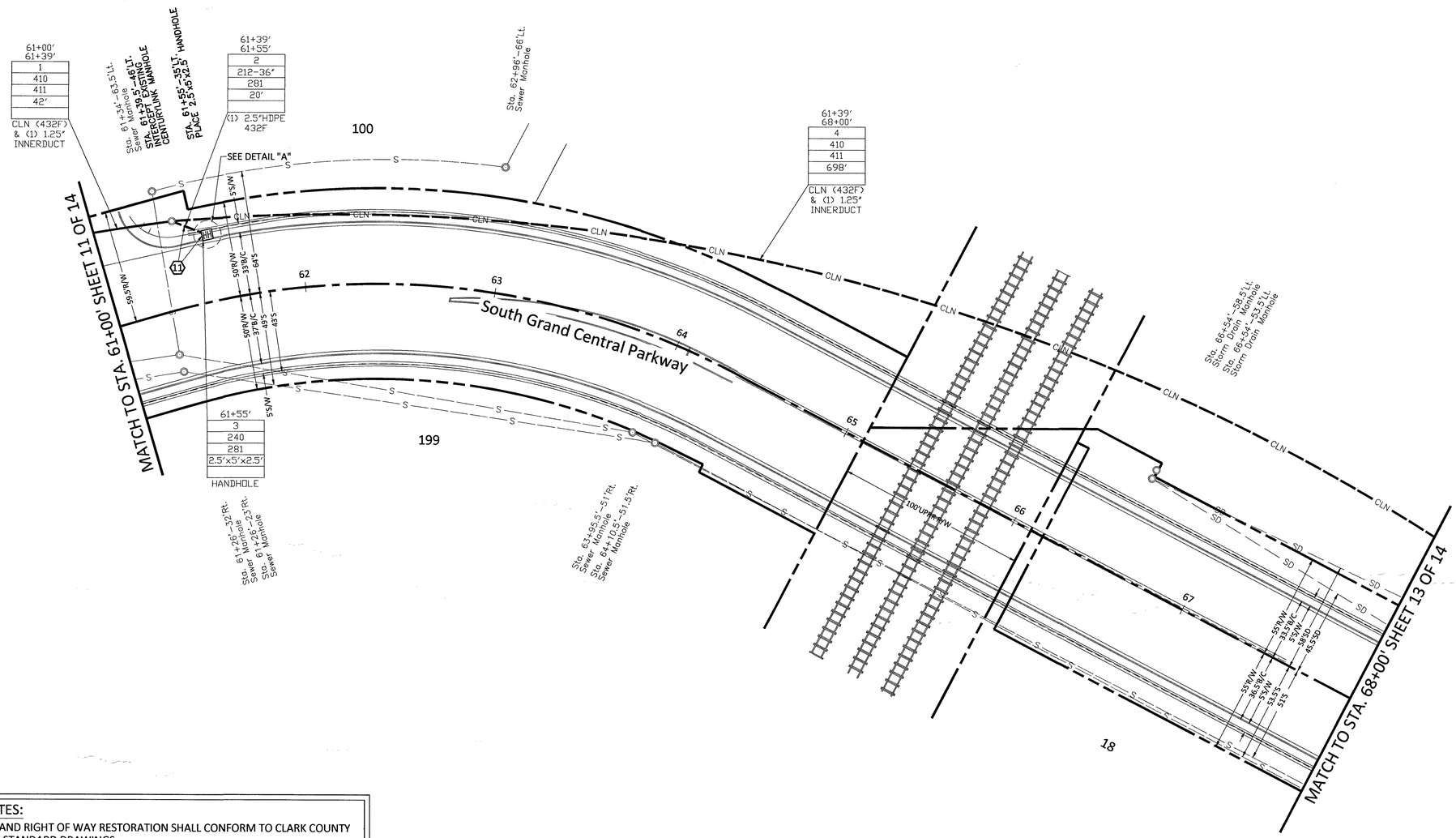

RTC NOTES:	
BACKFILL AND RIGHT OF WAY RESTORATION SHALL CONFORM TO CLARK COUNTY UNIFORM STANDARD DRAWINGS	
(1) 500.1	0 TO 5 YEARS PAVEMENT RESTORATION LONGITUDINAL CUT
(2) 500.2	0 TO 5 YEARS PAVEMENT RESTORATION TRAVERSE CUT
(3) 500.3	OVER 5 YEARS PAVEMENT RESTORATION LONGITUDINAL CUT. GREATER THAN 60' R.O.W
(4) 500.4	OVER 5 YEARS PAVEMENT RESTORATION LONGITUDINAL CUT. 60' R.O.W OR LESS
(5) 500.5	OVER 5 YEARS PAVEMENT RESTORATION TRAVERSE ALL R.O.W WIDTHS
(6) 501	TYPICAL UNDERGROUND UTILITY LOCATIONS IN RESIDENTIAL STREETS 60' OR LESS R.O.W
(7) 501.1	TYPICAL UTILITY UNDERGROUND LOCATIONS IN STREETS WITH GREATER THAN 60' R.O.W
(8) 503	METHOD B FOR RIGID AND FLEXIBLE PIPE TRENCH BACKFILL - PAVED AREAS
(9) 503.1	METHOD A FOR FLEXIBLE PIPE TRENCH BACKFILL - PAVED AREAS
(10) 503.2	METHOD A FOR RIGID PIPE TRENCH BACKFILL - PAVED AREAS
(11) 234	SIDEWALK
(12)	BACKFILL IN UNPAVED AREA AS REQUIRED BY LOCAL CODE OR AS APPROVED BY AGENCY.

210 PLACE CONDUIT
212 PLACE HIGH DENSITY POLYETHYLENE (HDPE)
240 PLACE HANDHOLE
250 PLACE MANHOLE
270 REMOVE AND RESTORE ASPHALT
280 REMOVE AND RESTORE CONCRETE
281 REMOVE AND RESTORE SIDEWALK
282 REMOVE AND RESTORE CURBING
410 PULL CABLE
411 PULL THROUGH DUCT (INNERDUCT)
520 PLACE AERIAL CABLE
630 DIRECTIONAL BORE

TRENCH DETAIL

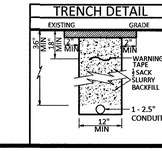

MCI

PROJECT: 916079, 916078, 916119, 916120, 916121

CELL SITE: LSV WORLD MARKET B

CITY OF LAS VEGAS, NEVADA

CLARIFICATION NO.	QUANTITY
SHEET TOTAL	
2" HDPE CONDUIT:	6'
2.5" HDPE CONDUIT:	20'
4" HDPE CONDUIT:	-
2' x 3' x 2' HANDHOLE(S):	-
2.5' x 5' x 2.5'HANDHOLE(S):	1
4' x 5' x 4'HANDHOLE(S):	-
MANHOLE(S):	-
AERIAL:	-
VZW CONDUIT:	-
3RD PARTY CONDUIT:	740'
TRENCH:	20'
TOTAL NEW UG FOOTAGE:	20'
TOTAL FOOTAGE:	760'

MCI COMMUNICATIONS SERVICES, INC.

OUTSIDE PLANT CONSTRUCTION

TITLE: CELL SITE: LSV WORLD MARKET B

DATE: 11/14/2018

DRAWN BY: PVEGA

REVISIONS

DATE	INITIAL

EXCEPT AS MAY BE OTHERWISE PROVIDED BY CONTRACT, THESE DRAWINGS AND SPECIFICATIONS SHALL REMAIN THE PROPERTY OF MCI COMMUNICATIONS SERVICES, INC., BOTH BEING ISSUED IN STRICT CONFIDENCE AND SHALL NOT BE REPRODUCED, COPIED, OR USED FOR ANY PURPOSE WITHOUT SPECIFIC WRITTEN PERMISSION.

SCALE

HORIZONTAL: 1"=30'

VERTICAL: NA

MP _____ TO MP _____

SHEET 12 OF 14

FILE: LSV WORLD MARKET B_11-14-18

M:\VERIZON ONEFIBER\LAS VEGAS\LSV FOREMASTER\LSV WORLD MARKET B\CONSTRUCTION DRAWINGS

CONSTRUCTION DRAWING

CITY OF LAS VEGAS, NEVADA

60 30 0 60

DRAWING SCALE IS IN FEET:
1"=60' AT 11"x17" print 1"=30' AT 24"x36" print

NORTH

Call at least two full working days before you begin excavation.

811 Know what's below. Call 811 before you dig.

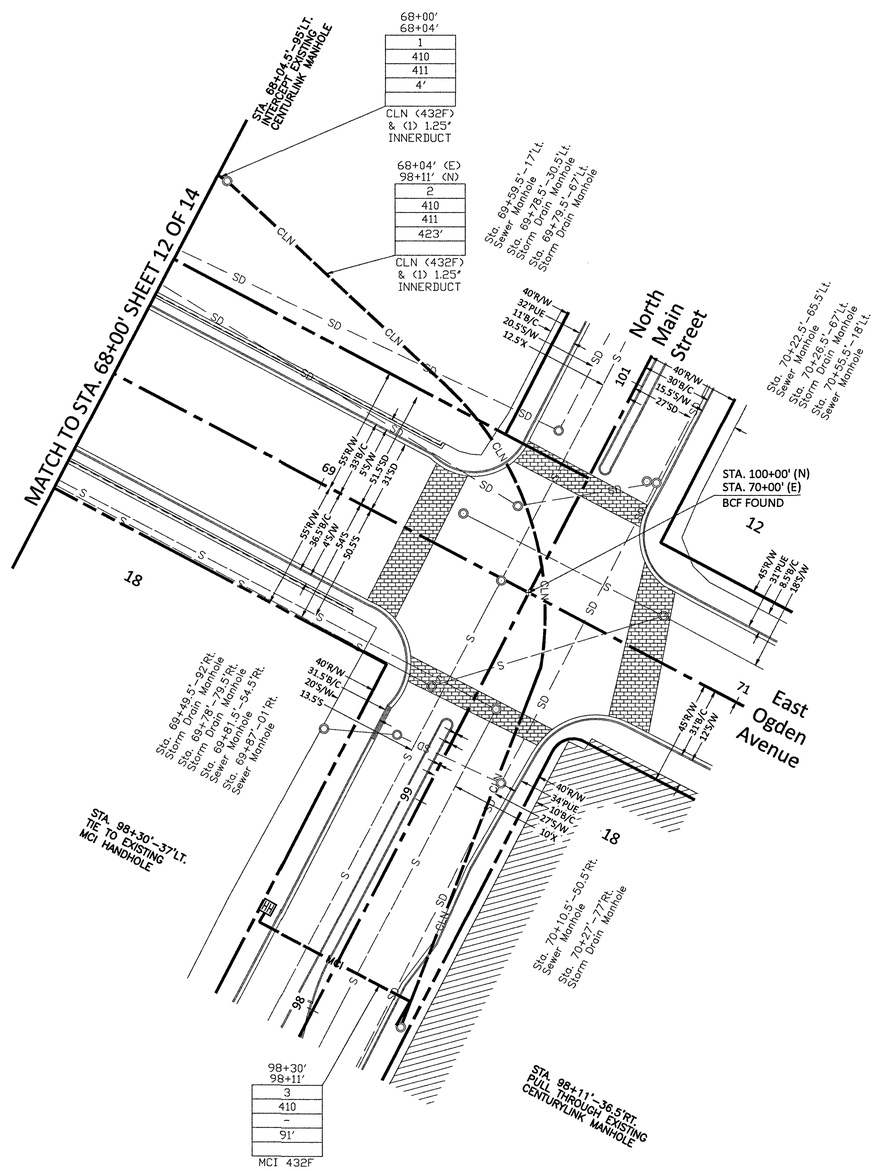

210 PLACE CONDUIT
212 PLACE HIGH DENSITY POLYETHYLENE (HDPE)
240 PLACE HANDHOLE
250 PLACE MANHOLE
270 REMOVE AND RESTORE ASPHALT
280 REMOVE AND RESTORE CONCRETE
281 REMOVE AND RESTORE SIDEWALK
282 REMOVE AND RESTORE CURBING
410 PULL CABLE
411 PULL THROUGH DUCT (INNERDUCT)
520 PLACE AERIAL CABLE
630 DIRECTIONAL BORE

RTC NOTES:

BACKFILL AND RIGHT OF WAY RESTORATION SHALL CONFORM TO CLARK COUNTY UNIFORM STANDARD DRAWINGS

1	500.1	0 TO 5 YEARS PAVEMENT RESTORATION LONGITUDINAL CUT
2	500.2	0 TO 5 YEARS PAVEMENT RESTORATION TRAVERSE CUT
3	500.3	OVER 5 YEARS PAVEMENT RESTORATION LONGITUDINAL CUT. GREATER THAN 60' R.O.W
4	500.4	OVER 5 YEARS PAVEMENT RESTORATION LONGITUDINAL CUT. 60' R.O.W OR LESS
5	500.5	OVER 5 YEARS PAVEMENT RESTORATION TRAVERSE ALL R.O.W WIDTHS
6	501	TYPICAL UNDERGROUND UTILITY LOCATIONS IN RESIDENTIAL STREETS 60' OR LESS R.O.W
7	501.1	TYPICAL UTILITY UNDERGROUND LOCATIONS IN STREETS WITH GREATER THAN 60' R.O.W
8	503	METHOD B FOR RIGID AND FLEXIBLE PIPE TRENCH BACKFILL - PAVED AREAS
9	503.1	METHOD A FOR FLEXIBLE PIPE TRENCH BACKFILL - PAVED AREAS
10	503.2	METHOD A FOR RIGID PIPE TRENCH BACKFILL - PAVED AREAS
11	234	SIDEWALK
12		BACKFILL IN UNPAVED AREA AS REQUIRED BY LOCAL CODE OR AS APPROVED BY AGENCY.

MCI

PROJECT: 916079, 916078, 916119, 916120, 916121

CELL SITE: LSV WORLD MARKET B – 02-27-19
CITY OF LAS VEGAS, NEVADA

CLARIFICATION NO.	QUANTITY
SHEET TOTAL	
2" HDPE CONDUIT:	-
2.5" HDPE CONDUIT:	-
4" HDPE CONDUIT:	-
2' x 3' x 2' HANDHOLE(S):	-
2.5' x 5' x 2.5'HANDHOLE(S):	-
4' x 5' x 4'HANDHOLE(S):	-
MANHOLE(S):	-
AERIAL:	-
VZW CONDUIT:	91'
3RD PARTY CONDUIT:	427'
TRENCH:	-
TOTAL NEW UG FOOTAGE:	-
TOTAL FOOTAGE:	518'

MCI
COMMUNICATIONS SERVICES, INC.
OUTSIDE PLANT CONSTRUCTION

TITLE: CELL SITE: LSV WORLD MARKET B – 02-27-19

DATE: 2/27/2019
DRAWN BY: CMENDOZA

REVISIONS

DATE	INITIAL

EXCEPT AS MAY BE OTHERWISE PROVIDED BY CONTRACT, THESE DRAWINGS AND SPECIFICATIONS SHALL REMAIN THE PROPERTY OF MCI COMMUNICATIONS SERVICES, INC., BOTH BEING ISSUED IN STRICT CONFIDENCE AND SHALL NOT BE REPRODUCED, COPIED, OR USED FOR ANY PURPOSE WITHOUT SPECIFIC WRITTEN PERMISSION.

SCALE

HORIZONTAL: 1"=30'
VERTICAL: NA
MP ____ TO MP ____
SHEET 13 OF 14
FILE: LSV WORLD MARKET B – 02-27-19

W:\VERIZON ONEFIBER\LAS VEGAS\LSV FOREMASTER\LSV WORLD MARKET B\CONSTRUCTION DRAWINGS

ROUTE SCHEMATIC

Call at least two full working days before you begin excavation.

811 Know what's below. Call 811 before you dig.

NORTH

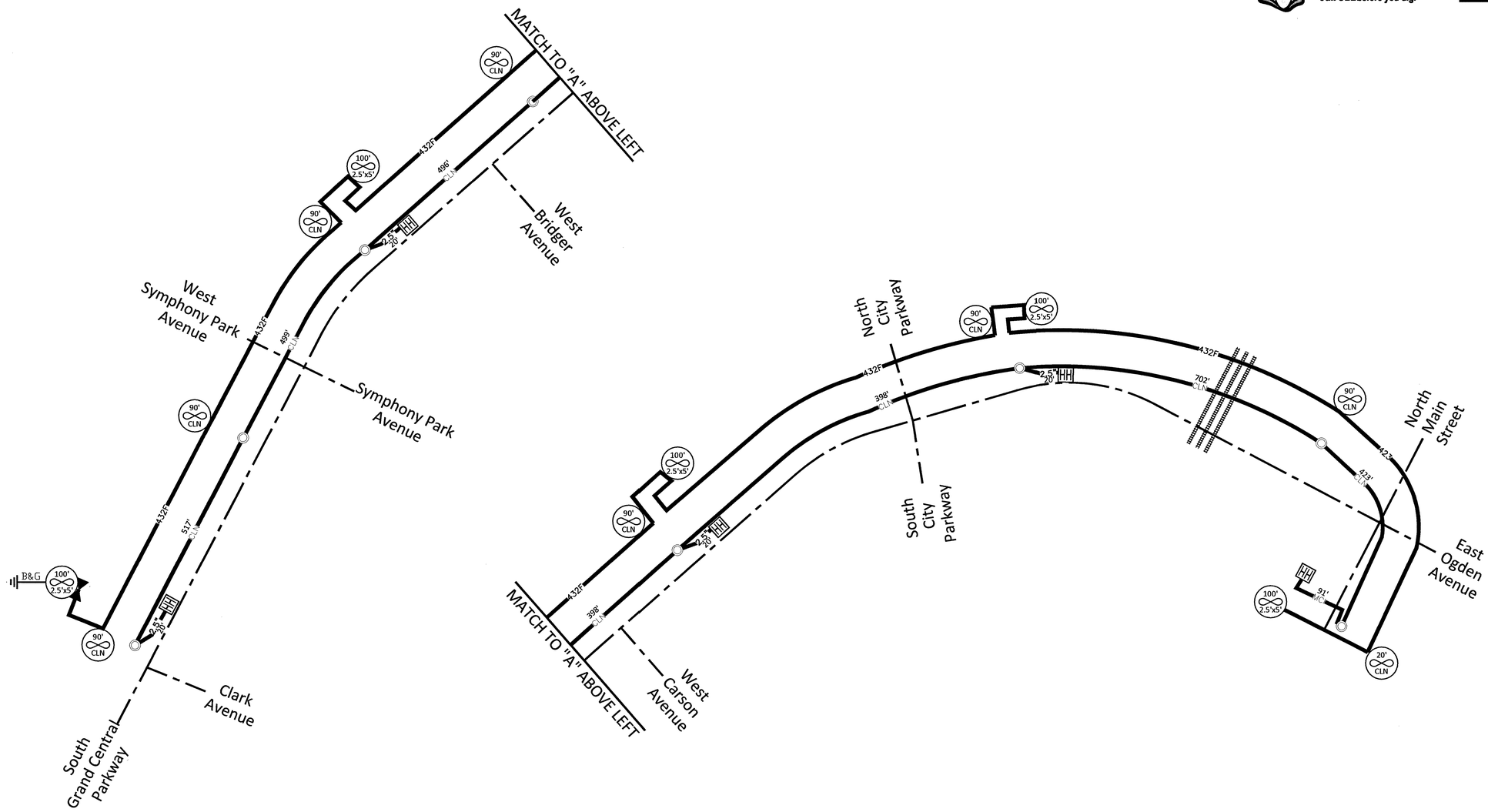

SITE-SPAN NAME: CELL SITE: LSV World Market B

SITE-SPAN ID: VZW PROJECT #1708APXX.029

FQNID	SEGMENT	FIBER COUNT	TRENCH	BORE	DB/OT	3RD PARTY	VZ OWNED	AERIAL	TOTAL
FIB:BUR::56000299	916079	432F	20'	'	'	'	'	'	20'
FIB:BUR::56000299	916078	432F	'	'	'	3,433'	'	'	3,433'
FIB:BUR::56000299	916119	432F	20'	'	'	'	'	'	20'
FIB:BUR::56000299	916120	432F	20'	'	'	'	'	'	20'
FIB:BUR::56000299	916121	432F	20'	'	'	'	'	'	20'

MCI

PROJECT: 916079, 916078, 916119, 916120, 916121

CELL SITE: LSV WORLD MARKET B

CITY OF LAS VEGAS, NEVADA

CLARIFICATION NO. QUANTITY

FIBER TOTALS

FIBER SIZE/LENGTH: 432F/4,683'

MCI COMMUNICATIONS SERVICES, INC.

OUTSIDE PLANT CONSTRUCTION

TITLE: CELL SITE: LSV WORLD MARKET B

PROJECT TITLE

DATE: 11/14/2018

DRAWN BY: PVEGA

REVISIONS

DATE	INITIAL

EXCEPT AS MAY BE OTHERWISE PROVIDED BY CONTRACT, THESE DRAWINGS AND SPECIFICATIONS SHALL REMAIN THE PROPERTY OF MCI COMMUNICATIONS SERVICES, INC. BOTH BEING ISSUED IN STRICT CONFIDENCE AND SHALL NOT BE REPRODUCED, COPIED, OR USED FOR ANY PURPOSE WITHOUT SPECIFIC WRITTEN PERMISSION.

SCALE

HORIZONTAL: 1"=30'

VERTICAL: NA

MP _____ TO MP _____

SHEET 14 OF 14

FILE: LSV WORLD MARKET B_11-14-18

M:\VERIZON ONEFIBER\LAS VEGAS\LSV FOREMASTER\LSV WORLD MARKET B\CONSTRUCTION DRAWINGS