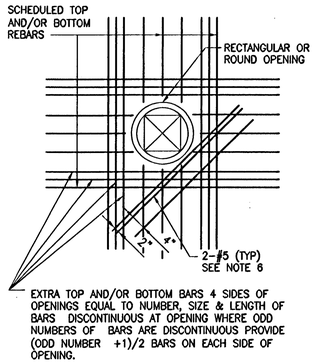

NOTES:

1. FOR OPENINGS IN WALLS THE WORDS "EACH FACE" SHALL BE SUBSTITUTED FOR "TOP AND/OR BOTTOM."
2. EVERY REBAR DISCONTINUOUS AT AN OPENING SHALL BE REPLACED BY AN EXTRA REBAR PLACED AT THE SIDE OF THE OPENING AS SHOWN. THE LENGTH OF THE EXTRA REBARS SHALL EQUAL THE LENGTH OF THE SCHEDULED REBARS THAT ARE NOT DISCONTINUED AT THE OPENINGS.
3. BEFORE POURING CONCRETE WALLS, FLOORS, BASE SLABS OR ROOFS, THE CONTRACTOR SHALL CHECK W/ OTHER TRADES FOR REQUIRED OPENINGS.
4. OPENINGS 12" OR LESS IN SLABS AND AT OPENINGS 18" OR LESS IN WALLS NO EXTRA REBARS ARE REQ'D, UNLESS NOTED OTHERWISE, SCHEDULED REBARS SHALL BE SPREAD (NOT CUT) TO ALLOW FOR OPENINGS TO BE MADE.
5. UNLESS NOTED OTHERWISE ON DRAWINGS, PROVIDE EXTRA REBARS AROUND OPENINGS AS SHOWN AND INDICATED ABOVE.
6. ALL BAR MINIMUM LENGTHS TO BE WIDTH OR DIAMETER OF OPENING, PLUS 5'-0" AND CENTERED ON THE OPENING. PROVIDE STANDARD HOOK WHERE SPACE DOES NOT PERMIT FULL BAR LENGTH.

1/- DETAIL
SCALE: NTS

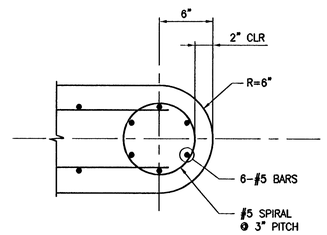

C/- SECTION
SCALE: 1/2" = 1'-0"

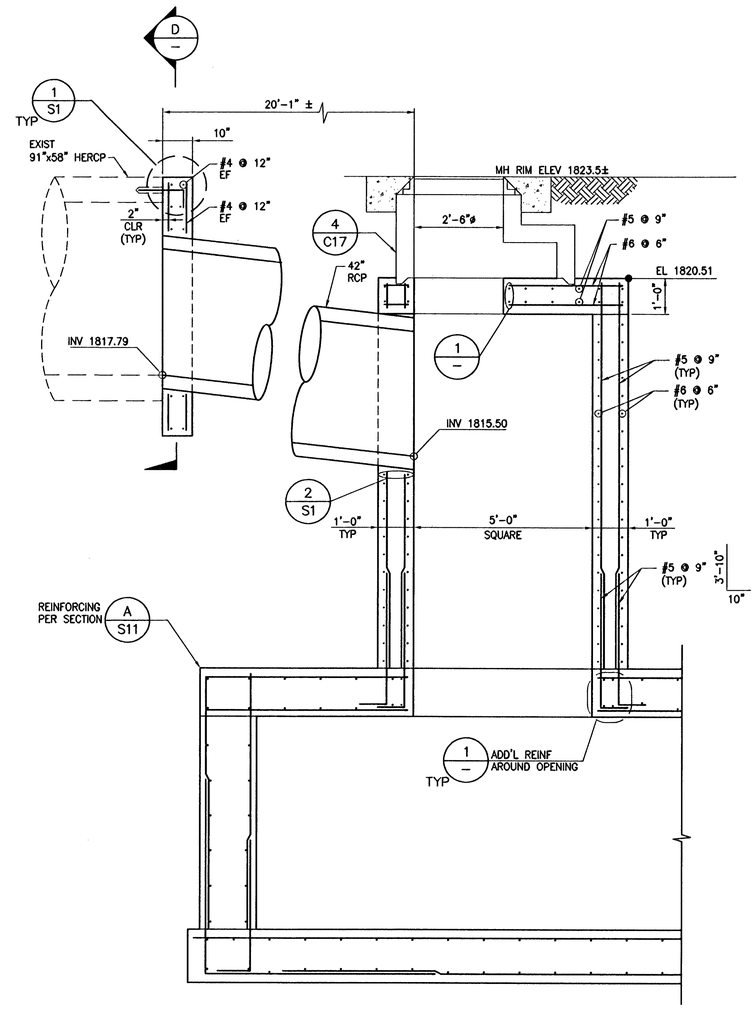

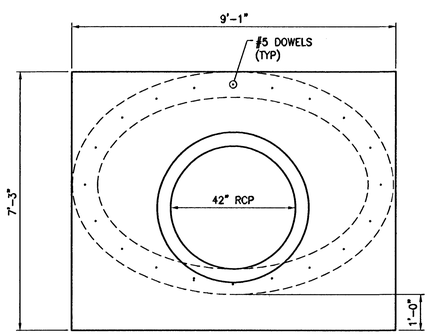

NOTE: PROVIDE ADDITIONAL REINF PER 2/S1

D/- SECTION
SCALE: 1/2" = 1'-0"

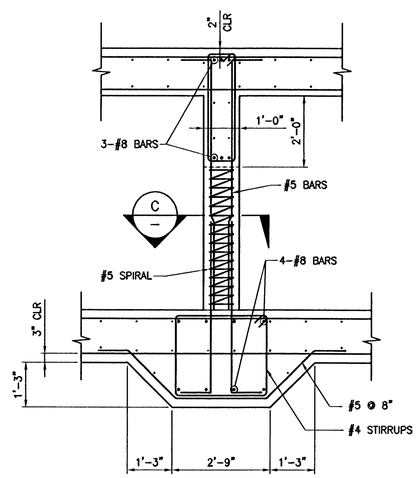

B/- SECTION
SCALE: 1/2" = 1'-0"

A/- SECTION
SCALE: 1/2" = 1'-0"

REV. NO.	DATE	DESCRIPTION	APPROVED
		124664	

CLARK COUNTY NEVADA

FLAMINGO-BOULDER HIGHWAY NORTH SAHARA AVENUE TO FLAMINGO WASH

SECTIONS – "OS" 151+77.73 TO "PS" 100+56.82

CLARK COUNTY, NEVADA, DEPARTMENT OF PUBLIC WORKS

PROFESSIONAL ENGINEER – STATE OF NEVADA – DAVID A. TURNER – Exp. 06/30/2012 – CIVIL – No. 18979 – 7/22/10

PROJECT No: 500.875 DRAWN BY: FAM\TAB\NO
DESIGNED BY: FAM CHECKED BY: RIN
APPROVED BY RIN

G. C. WALLACE COMPANIES
ENGINEERS | PLANNERS | SURVEYORS
1555 S. RAINBOW BLVD · LAS VEGAS, NV 89146
T·702.804.2000 · F·702.804.2299 · GCWALLACE.COM

SCALE
HORIZ: NONE
VERT: NONE
FIELD BOOK
CCPW PROJECT #F060309
W.O. #2007-15

L-1867
DRAWING NO. 10705-497
S12
11-18946
SHT. 41 OF 50

FLAMINGO-BOULDER HIGHWAY NORTH - SAHARA AVENUE TO FLAMINGO WASH