15-13-124

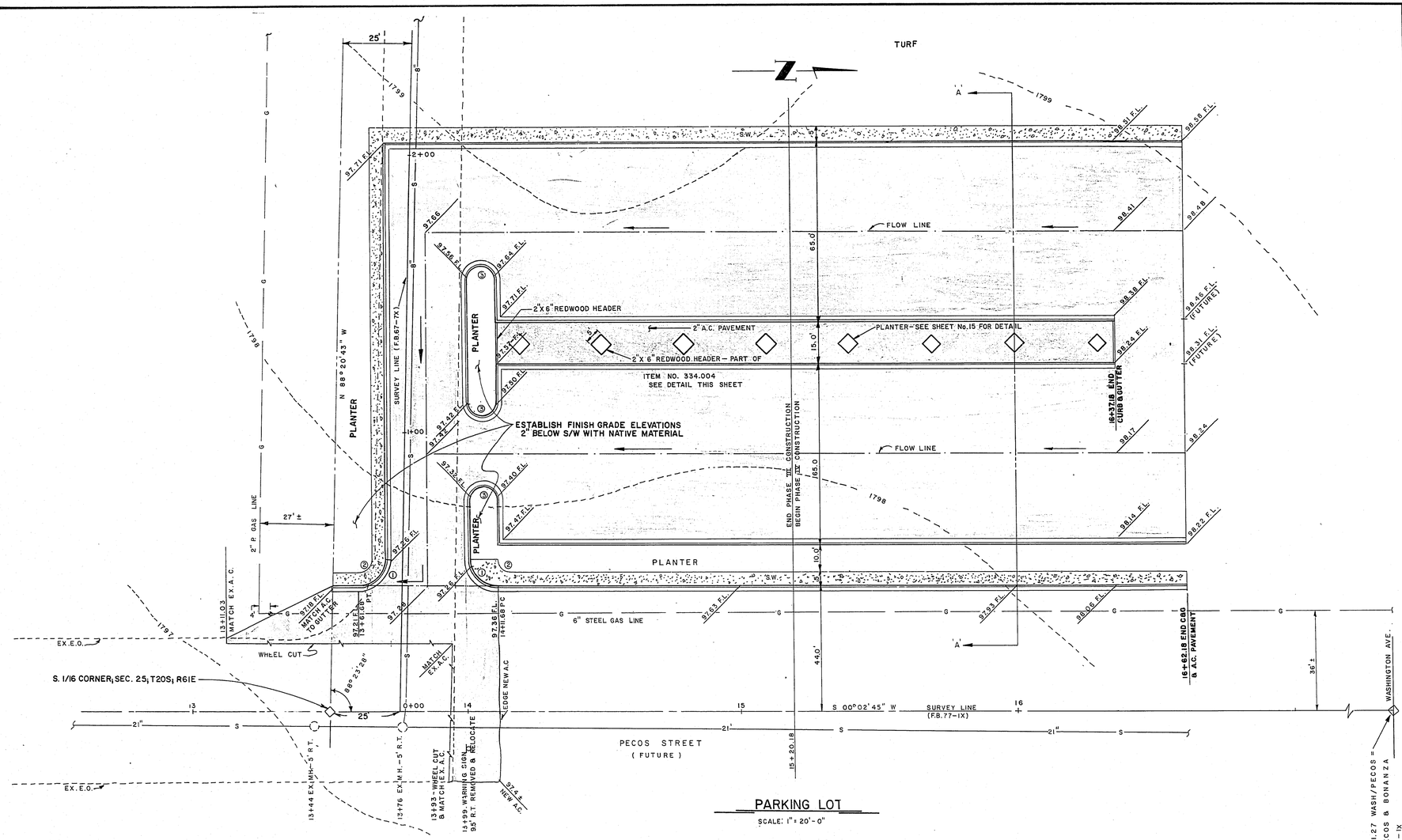

PARKING LOT

SCALE: 1" = 20'-0"

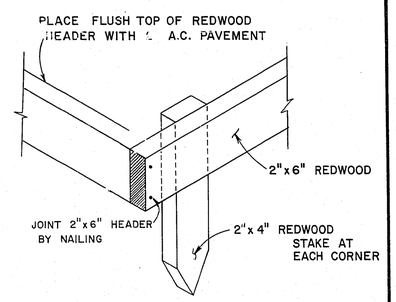

REDWOOD HEADER DETAIL

NO SCALE

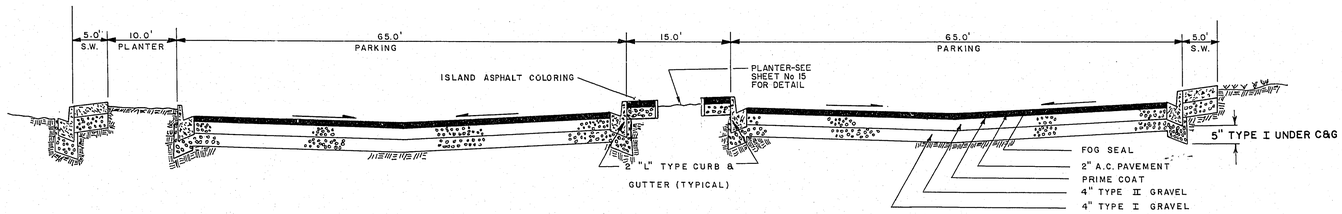

TYPICAL SECTION – 'A-A'

SCALE- H-1" = 10'
V-1" = 2'

NOTE:
CONTRACTOR SHALL PAINT A 10' SQUARE TEST PATCH OF THE ISLAND ASPHALT COLORING BEFORE PAINT MEDIA ISLANDS. THE TEST PATCH WILL BE USED BY THE ENGINEER TO ESTABLISH APPLICATION RATE OF THE ISLAND PAINT.

EXISTING UTILITIES ARE LOCATED ON THE PLANS FOR THE CONVENIENCE OF THE CONTRACTOR ONLY. THE CONTRACTOR SHALL BEAR FULL RESPONSIBILITY FOR PROTECTION OF UTILITIES AND THE CITY BEARS NO RESPONSIBILITY FOR UTILITIES NOT SHOWN ON THE PLANS OR NOT IN THE LOCATION SHOWN ON THE PLANS.

CONTRACT DRAWING

APPROXIMATE QUANTITIES — THIS SHEET

ITEM NO.	DESCRIPTION	UNIT	QUANT.
	PHASE III QUANTITIES		
201.100	**PARKING LOT EXCAVATION**	C.Y.	1035
340.014	2' "L" TYPE CURB & GUTTER	L.F.	936
340.114	4" CONC. SIDEWALK	S.F.	2261
302.100	TYPE I GRAVEL	C.Y.	313
302.200	TYPE II GRAVEL	C.Y.	310
334.004	2" A.C. PAVEMENT	T.N.	299
	PRIME COAT	GAL.	765
333.100	FOG SEAL	GAL.	383
334.910	ISLAND ASPHALT COLORING	S.Y.	170
	PHASE IV QUANTITIES		
201.100	**PARKING LOT EXCAVATION**	C.Y.	**878**
340.014	2' "L" TYPE CURB & GUTTER	L.F.	**660**
340.114	4" CONC. SIDE WALK	S.F	1420
302.100	TYPE I GRAVEL	C.Y	256
302.200	TYPE II GRAVEL	C.Y	262
334.004	2" A.C. PAVEMENT	T.N	277
	PRIME COAT	GAL.	650
333.100	FOG SEAL.	GAL.	325
334.910	ISLAND ASPHALT COLORING	S.Y.	185

CURVE DATA

No.	RADIUS	DELTA	LENGTH	TANGENT	LOCATION
①	10.0'	90°00'00"	15.71'	10.0'	B.C.
②	5.0'	90°00'00"	7.85'	5.0'	B.W.
③	5.0'	180°00'00"	15.71'	—	B.C.

Revisions	Date

W.O. no. 3350 3289

Scale (v) AS NOTED

Date 6-30-77

Drawn by STAFF

Scale (h) AS NOTED

Fld. bk. no. AS SHOWN

Design by C. KAJKOWSKI

Approved by the Director of Public Services

Date

Department of Public Services — Engineering Design Division

PARKING LOT
PHASE III & IV

FREEDOM PARK

Drawing no. 650.22-8

13/27

BOR 77.73 CLV-BOR 1473

SHEET 13 OF 27