FED. RD. REG. NO.	STATE	PROJECT NO.	COUNTY
9	NEV.	SPS-095-2(4)	CLARK

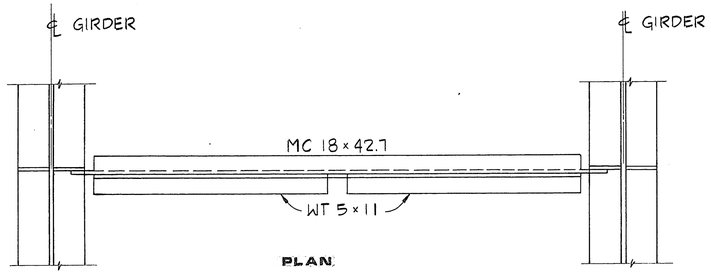

PLAN

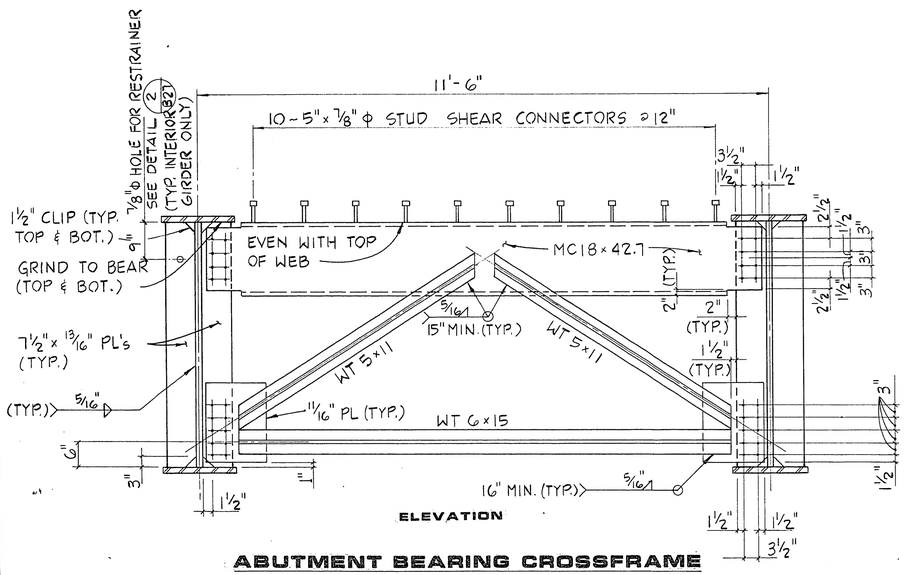

ELEVATION

ABUTMENT BEARING CROSSFRAME AND PIER 4 (LEFT & RIGHT)

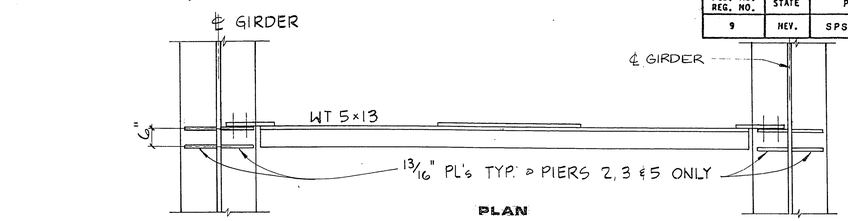

PLAN

NOTES:

1. ALL BOLT HOLES TO BE 15/16" DIAMETER IN VERTICAL DIRECTION.
2. ALL BOLT HOLES MAY BE SHORT SLOTTED IN HORIZONTAL DIRECTION, UNLESS NOTED OTHERWISE.
3. ALL BOLTS TO BE 7/8" ϕ (A-325)
4. UNDER FULL DEAD LOAD, THE BEARING STIFFENERS ARE TO BE VERTICAL.

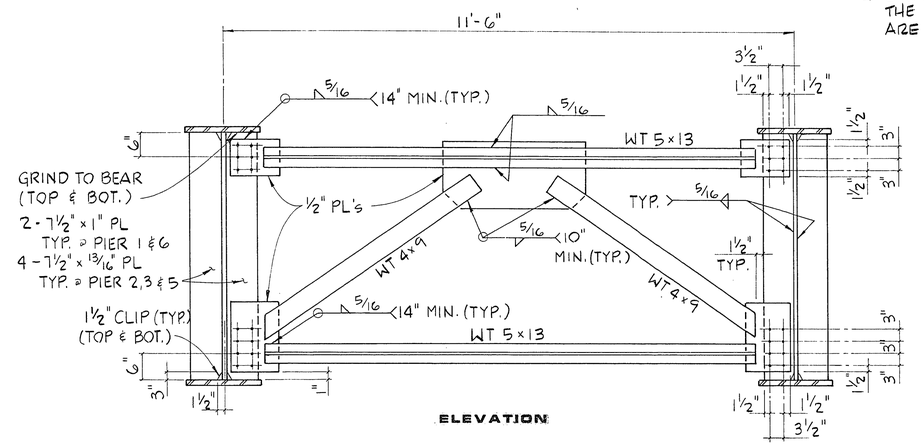

ELEVATION

PIER BEARING CROSSFRAME AT PIERS 1, 2, 3, 5 & 6

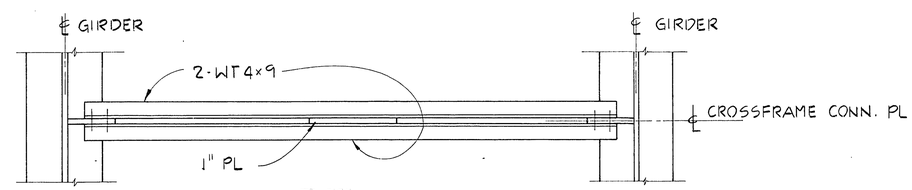

PLAN

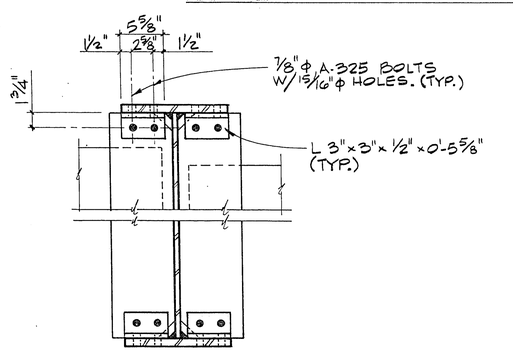

(FOR INTERMEDIATE CROSSFRAMES ONLY)

DETAIL A

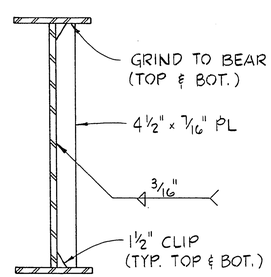

INTERMEDIATE TRANSVERSE STIFFENER

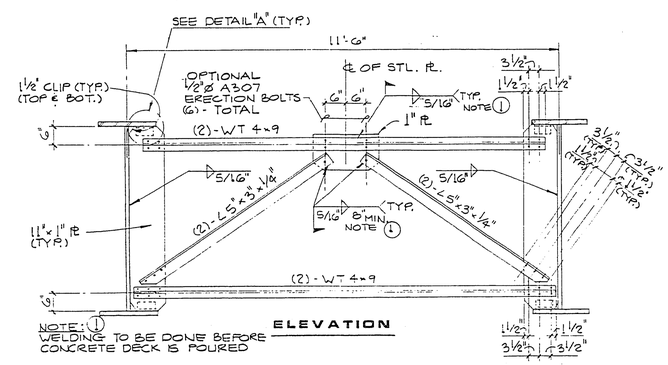

NOTE: 1 WELDING TO BE DONE BEFORE CONCRETE DECK IS POURED

ELEVATION

INTERMEDIATE CROSSFRAME

REV	DATE	DESCRIPTION
1	11/12/87	ISSUE FOR GMP
2	1-14-88	REVISED PER ADDENDUM NO. 2
3	2-11-88	ISSUE FOR CONSTRUCTION

RECOMMENDED: George C. Wallace, R.E. NO. 1815, DATE 9/21/87

G.C. WALLACE, INC. Engineering/Architecture
1555 SOUTH RAINBOW BLVD./LAS VEGAS, NEVADA 89102

HOWARD HUGHES PROPERTIES
HUSITE PARKWAY INTERCHANGE
FRAMING DETAILS

SHEET 96
B24
OF 138 SHEETS

I-1845W

JOB NO. 620.222

6/84 DIETERICH-POST 65328

26-3-148 107-V1882