FED. RD. REG. NO.	STATE	PROJECT NO.	COUNTY
9	NEV.	SPS-095-2(4)	CLARK

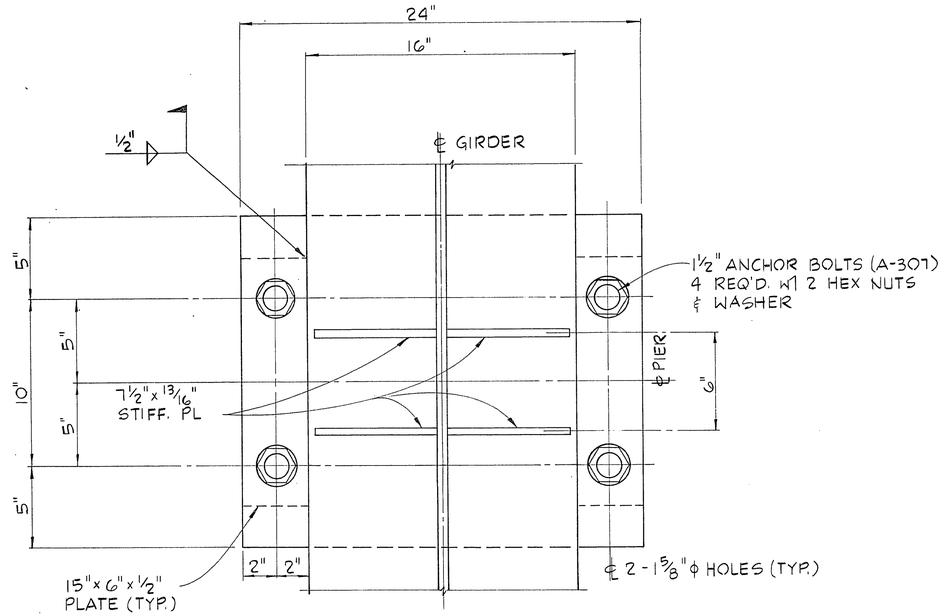

PLAN

(BEARING ASSEMBLY)

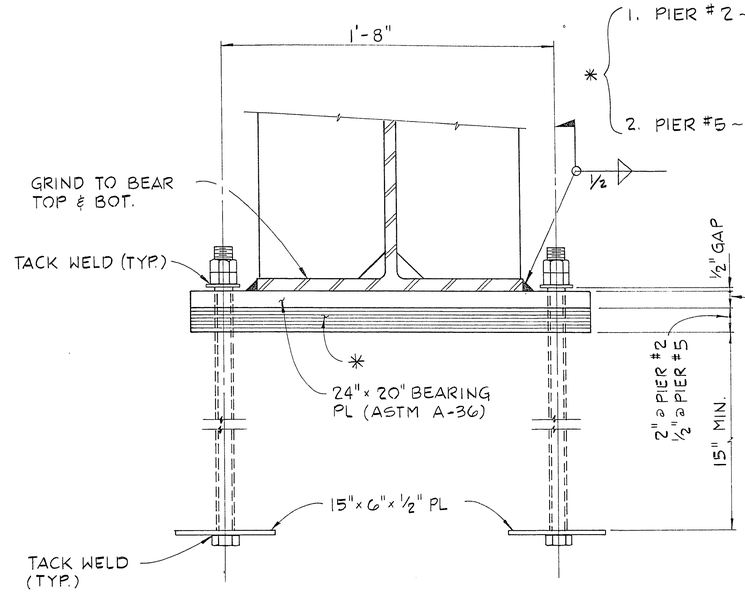

ELEVATION

(BEARING ASSEMBLY)

NOTES

1. PIER #2 ~ 24" x 20" x 2" LAMINATED BEARING PADS (60 DURO) W 3-14 GAGE SHIMS.
2. PIER #5 ~ 24" x 20" x 1/2" PLAIN BEARING PADS (70 DURO)

NOTES:

1.) ALL STEEL BEARING ASSEMBLIES TO BE A-36
2.) BEARING ASSEMBLIES TO BE GALVANIZED AFTER FABRICATION.
3.) BOLTS FOR ANCHORAGE ASSEMBLIES TO BE GALVANIZED.
4.) BEARING PADS TO BE VULCANIZED TO THE BEARING PLATE AS RECOMMENDED BY THE MANUFACTURER.

REV	DATE	DESCRIPTION
1	11/16/81	ISSUE FOR CONSTRUCTION
2	8-21-85	ISSUE FOR CONSTRUCTION

RECOMMENDED: GEORGE C. WALLACE 1815 R.E. NO. 7/21/87 DATE

G.C. WALLACE, INC. Engineering/Architecture 1555 SOUTH RAINBOW BLVD./LAS VEGAS, NEVADA 89102

HOWARD HUGHES PROPERTIES

HUSITE PARKWAY INTERCHANGE

BEARING PLATE DETAILS

SHEET 90

B18

OF 138 SHEETS

I-1845W

JOB NO. 620.222

8/84 DIETERICH-POST 6532B

26-3-87 107-V1882