FED. RD. REG. NO.	STATE	PROJECT NO.	COUNTY
9	NEV.	SPS-095-2(4)	CLARK

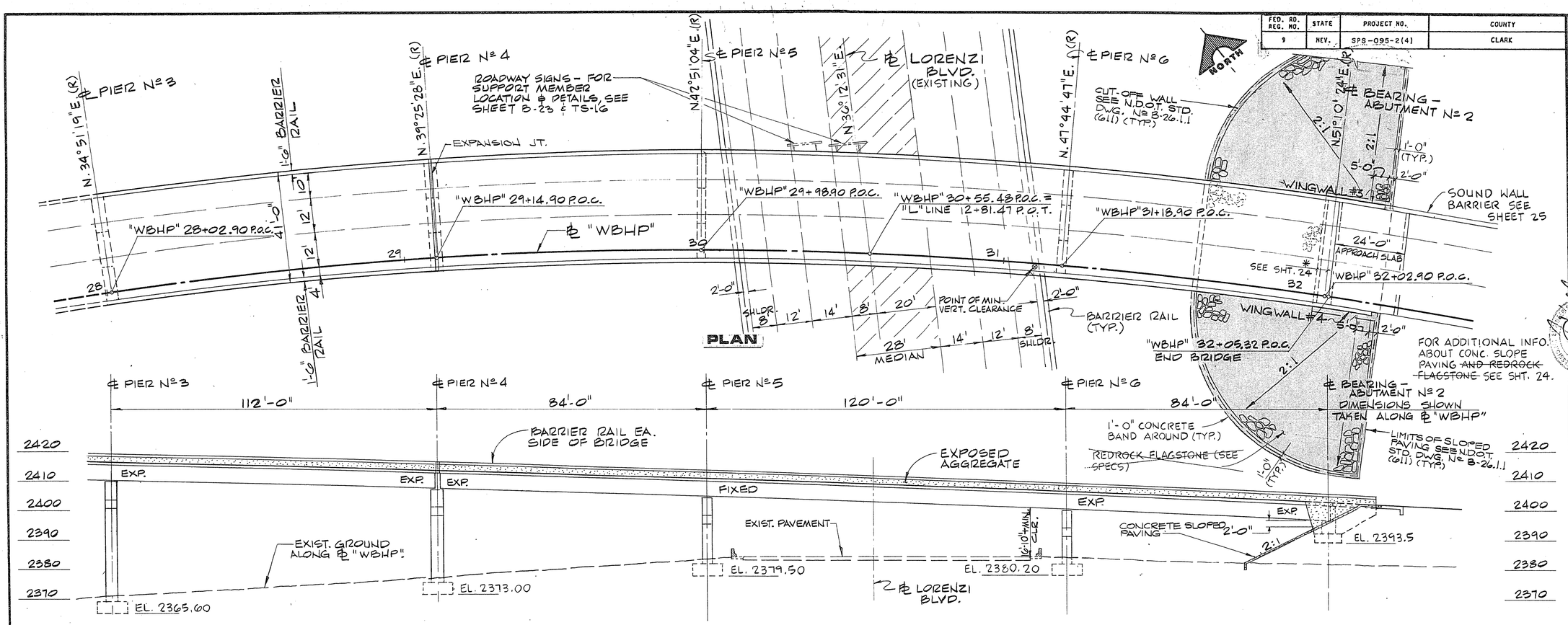

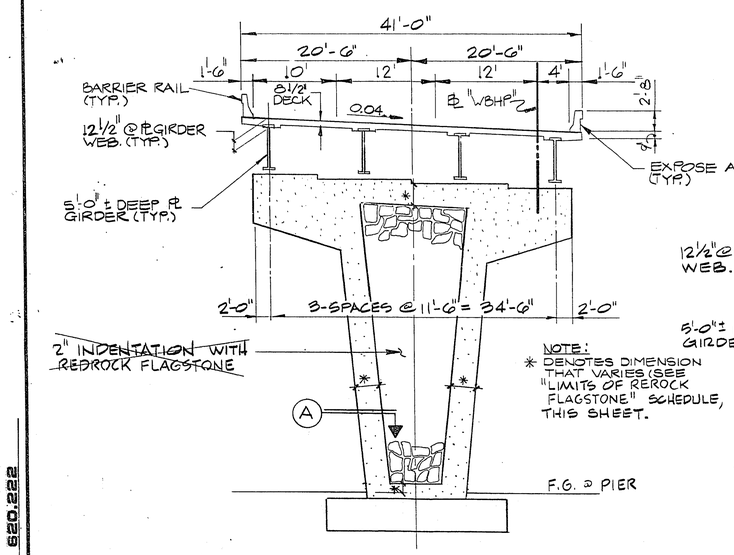

NOTE:
* DENOTES DIMENSION THAT VARIES (SEE "LIMITS OF REDROCK FLAGSTONE" SCHEDULE, THIS SHEET.

TYPICAL SECTION
PIERS 1,2,3, & 4

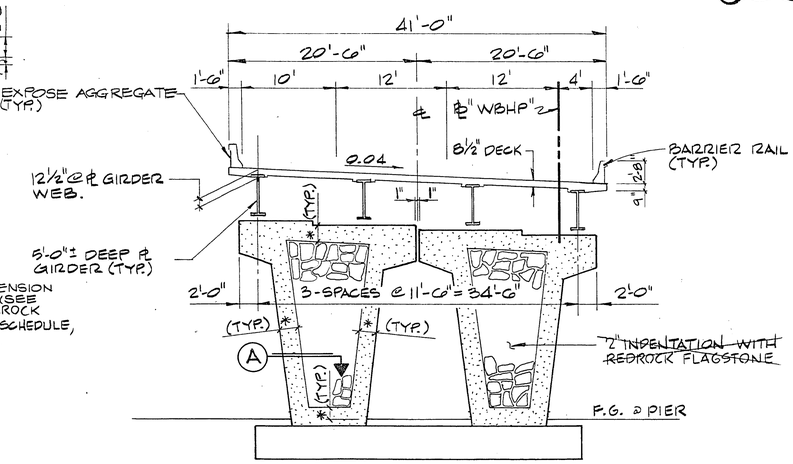

TYPICAL SECTION
PIERS 5 & 6

NOTE:
INDENTED AREAS ON ALL PIERS SHALL RECEIVE AN EXPOSED AGGREGATE FINISH, INCLUDING CLEAR SEALER, AS SPECIFIED IN N.D.O.T. STD. SPEC. 502.03.20.

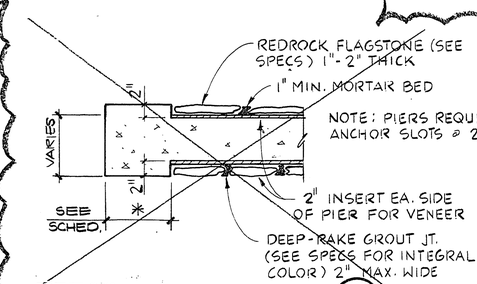

DETAIL

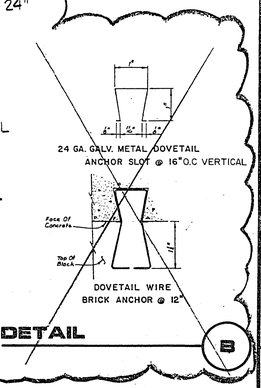

DETAIL

LIMITS OF REDROCK FLAGSTONE	
PIER #	DIMENSION (*)
1	4'-0"
2	3'-0"
3	3'-6"
4	4'-0"
5	2'-0"
6	2'-0"

REV	DATE	DESCRIPTION
1	11-4-97	ISSUE FOR GMP
2	1-7-98	ISSUE FOR CONSTRUCTION
3	3-16-98	ISSUE PER G.C.W. LETTER

R.E. NO. 1815 DATE 9/21/97

G.C. WALLACE, INC.
Engineering/Architecture
1555 SOUTH RAINBOW BLVD / LAS VEGAS, NEVADA 89102

HOWARD HUGHES PROPERTIES
HUSITE PARKWAY INTERCHANGE
GENERAL PLAN & ELEV.

SHEET 75
B2
OF 138 SHEETS

I-15 45W

JOB NO. 620.222

8/94 DIETERICH-POST 6532B

20-3-197 107-U1882