## WATER CONSTRUCTION NOTES

1. INSTALL MECHANICAL JOINT TAPPING SLEEVE W/ TAPPING VALVE
2. INSTALL 10"x12" DIP EXPANDER
3. INSTALL 45° BEND WITH THRUST BLOCK PER UDACS PLATE No. 5
4. INSTALL 12" DIP WATERLINE
5. ABANDON EXISTING VALVE IN CLOSED POSITION AFTER RELOCATION IS COMPLETE
6. STUB AND CAP EXISTING WATERLINE WITH THRUST BLOCK PER UDACS PLATE No. 5

NORTH

SCALE 1" = 40'

40 0 40 80

SCALE FEET

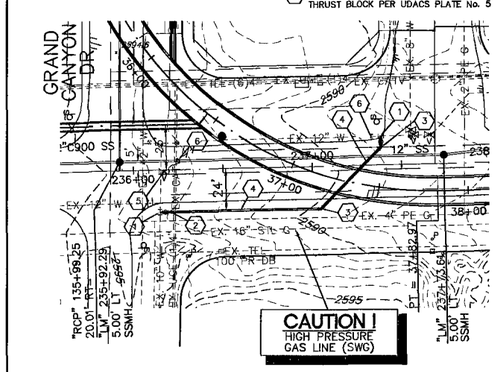


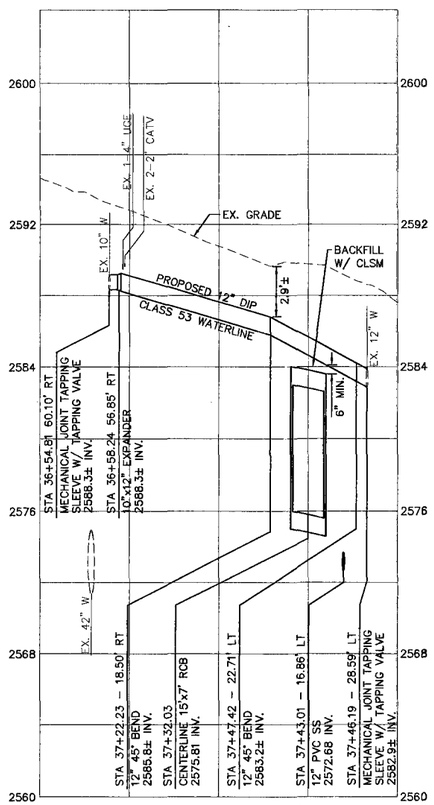


## 12" WATERLINE RELOCATION PLAN AND PROFILE

SCALE: HORIZ. – 1" = 40'
VERT. – 1" = 4'

8 / C14

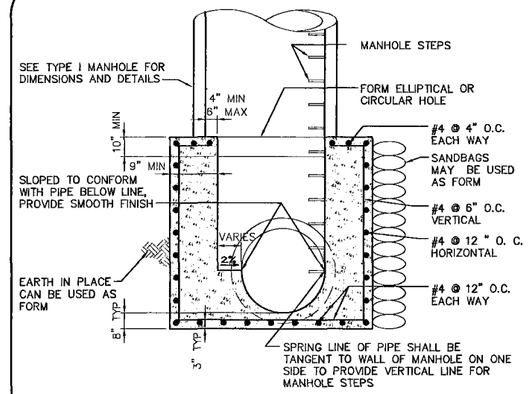


## TYPE III MANHOLE SECTION

SCALE: NTS

NOTE: REFER TO USD #406 FOR ADDITIONAL DETAILING FOR TYPE III MANHOLE

7 / C14

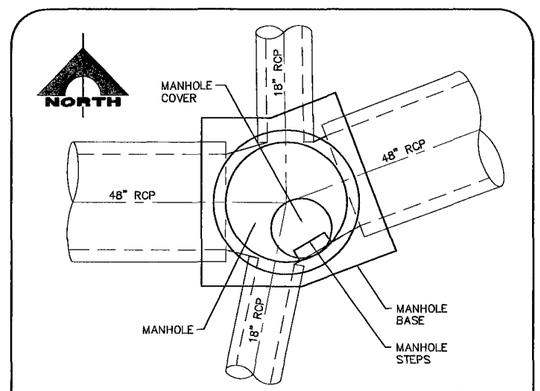


## MANHOLE ACCESS DIAGRAM SDMH#7

SCALE: NTS

6 / C14

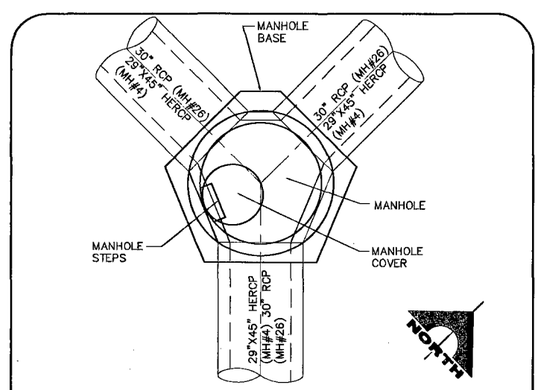


## MANHOLE ACCESS DIAGRAM SDMH#4, SDMH#26

SCALE: NTS

5 / C14

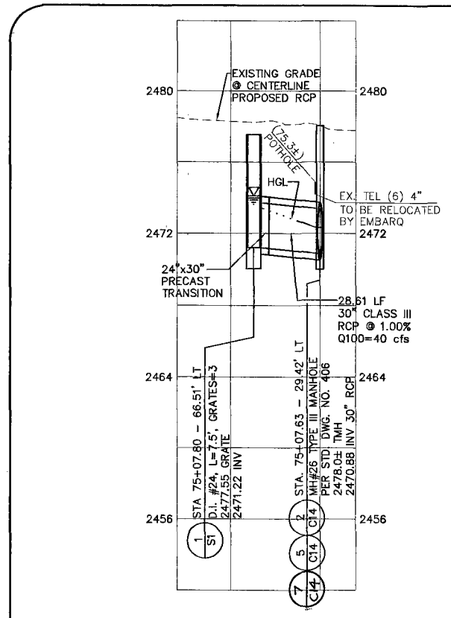


## STORM DRAIN LATERAL (STA 75+07.63)

SCALE: HORIZ. – 1" = 40'
VERT. – 1" = 4'

3 / C14

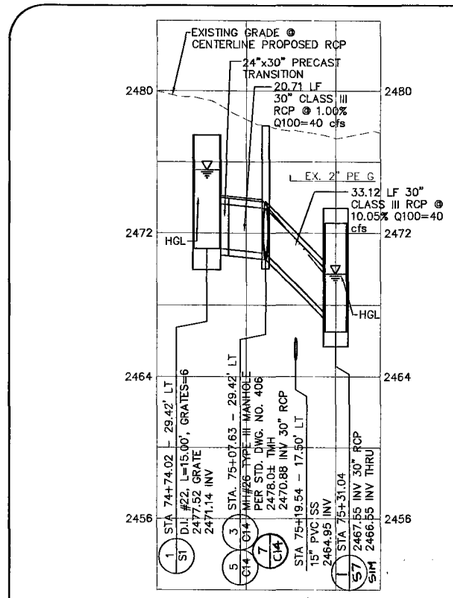


## STORM DRAIN LATERAL (STA 75+31.04)

SCALE: HORIZ. – 1" = 40'
VERT. – 1" = 4'

2 / C14

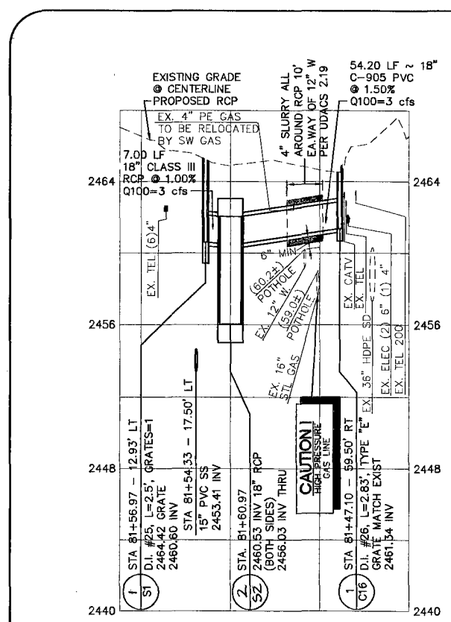


## STORM DRAIN LATERAL (STA 81+60.97)

SCALE: HORIZ. – 1" = 40'
VERT. – 1" = 4'

4 / C14

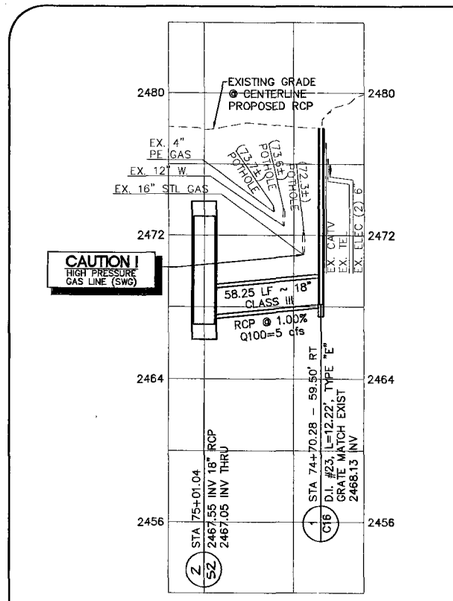


## STORM DRAIN LATERAL (STA 75+01.04)

SCALE: HORIZ. – 1" = 40'
VERT. – 1" = 4'

1 / C14

### CONTROLLED LOW STRENGTH MATERIAL (CLSM)

Protect waterlines in place. Wherever a waterline is above a storm drain or sewer where compaction requirements under a waterline cannot be met, backfill trench with controlled low strength material (CLSM) to the springline of the waterline. This requirement is for structural support only. Additional health regulations may apply per UDACS 2.19.

All Sewer/Storm Drains crossing water lines must conform to Section 2.19 of the Uniform Design and Construction Standards for Potable Water Systems (UDACS) for water and storm main crossings and clearances. ESN.064

Note:
Call Southwest Gas at 365-2296 for Standby when excavating over or near High Pressure Gas lines.

LAS VEGAS VALLEY WATER DISTRICT — DATE 3-23-07

| REV | DATE | BY | REVISION |
|---|---|---|---|
| | | | |

GOWAN NORTH CHANNEL – PHASE IV

DEPARTMENT OF PUBLIC WORKS
400 STEWART AVENUE
LAS VEGAS NEVADA, NV 89101
(702) 229-6276

G.C. WALLACE, INC.
Engineers/Planners/Surveyors
1555 SOUTH RAINBOW BLVD./LAS VEGAS, NEVADA 89146
TELEPHONE: (702) 804-2000 • FAX: (702) 804-2299

SHEET: LATERALS AND 12" WATERLINE RELOCATION PLAN & PROFILE

TITLE: GOWAN NORTH CHANNEL PHASE IV

DRAWN BY: DVJ
DESIGNED BY: CML
CHECKED BY: WEH
SCALE: 1" = 20' HORIZ. NONE VERT.
PROJECT NO: 412.627

PROFESSIONAL ENGINEER — WILLIAM E. HUNTER III — Exp. 06/30/2008 — CIVIL — No. 8833 — STATE OF NEVADA — SEAL — 3/23/07

SHEET C-14
31 OF 45 SHEETS
DRAWING NO. 731-65C

F:\412-627\dwg\mpros\gnc_c14.dwg 03-22-07 08:22:14 Djohnson

101 209 M