# SYMBOLS LEGEND

- CEILING OUTLET & LIGHTING FIXTURE AS NOTED.
- WALL BRACKET OUTLET & LIGHTING FIXTURE AS NOTED.
- FLUORESCENT STRIP LIGHT AS NOTED
- FLUORESCENT LIGHTING FIXTURE AS NOTED
- S — SINGLE POLE SINGLE THROW SWITCH +4'-6" U.N.O.
- $S_3$ — 3-WAY SWITCH +4'-6"
- $S_4$ — 4-WAY SWITCH +4'-6"
- $S_T$ — THERMAL SWITCH
- PHOTOCELL
- DIMMER SWITCH +4'-6" (SIZE AS NOTED)
- DUPLEX GROUNDING TYPE RECEPTACLE +1'-0" U.N.O.
- 1/2 HOT, 1/2 SWITCHED DUPLEX GROUNDING TYPE RECEPTACLE +1'-0" U.N.O.
- SPECIAL PURPOSE OUTLET AS NOTED
- SMOKE DETECTOR
- TELEPHONE OUTLET
- JUNCTION BOX
- 2 DUPLEX GROUNDING TYPE RECEPTACLES @ 4"x4" BOX @ +1'-0" UNO
- DISCONNECT SWITCH AS NOTED
- FUSED DISCONNECT SWITCH AS NOTED
- CIRCUIT BREAKER AS NOTED
- SWITCH & FUSE AS NOTED
- (M) METER
- C.T.s
- TRANSFORMER AS NOTED
- ELECTRICAL PANEL AS NOTED
- MAIN SWITCHBOARD OR DISTRIBUTION PANEL AS NOTED
- FURNISHED WITH EQUIPMENT, TERMINALS, CONTROLS, ETC. INSTALLED & WIRED BY ELECTRICAL CONTRACTOR. (HANDLE DENOTES COMBINATION TYPE)
- (T) THERMOSTAT FURNISHED BY MECH. INSTALLED & WIRED BY ELECTRICAL.
- MAGNETIC CONTACTOR AS NOTED (HANDLE DENOTES COMBINATION TYPE)
- MOTOR (SIZE AS NOTED)
- CONDUIT UNDER SLAB OR EARTH
- CONDUIT EXPOSED
- CONDUIT CONCEALED
- CONDUIT HOMERUN AS NOTED
- HASH MARKS INDICATE NO OF #12 CONDUCTORS, (UNO)
- WP — WEATHERPROOF
- GFI — GROUND FAULT INTERRUPTER
- UNO — UNLESS NOTED OTHERWISE.
- CU BOND TO MAIN WTR. COLD WTR PIPE — CU UFER GROUND — UFER GROUND ~ SIZE AS NOTED
- TELEPHONE DISTRIBUTION PULL BOX, SEE DETAIL
- PRIMARY PULL BOX 1502, SEE DETAIL
- POWER CO. TRANSFORMER LOCATION
- "DELTA BANK" POWER CO. TRANSFORMER LOCATION
- NOTE CALL OUT. SEE SCHEDULE OF NOTES EA. SHT.
- DETAIL CALL OUT.
- 74 — ALM RELAY
- 71 — LEVEL SWITCH H/PR DEVICE
- 63 — PRESSURE SWITCH
- 80 — FLOW SWITCH

## NOTES:

1) IT SHALL BE THE RESPONSIBILITY OF THE ELECTRICAL CONTRACTOR TO REVIEW ALL DRAWINGS TO DETERMINE ANY AND ALL ITEMS THAT REQUIRE ELECTRICAL CONNECTIONS, CONTROLS, WIRING DEVICES AND THERMAL MAGNETIC OVERCURRENT PROTECTION. THESE ITEMS ALONG WITH ALL NECESSARY APPLICABLE APPURTENANCES SHALL BE INSTALLED AND WIRED COMPLETE AS PER THE N.E.C. STANDARDS.

2) ELECTRICAL CONTRACTOR SHALL OBTAIN CERTIFIED APPROVED DRAWINGS FROM THE POWER & TELEPHONE COMPANY, AND INSTALL SERVICES AS SHOWN ON THESE DRAWINGS. ALL UTILITY CO. COSTS & CHARGES FOR THESE SERVICES SHALL BE INCLUDED IN THE ELECTRICAL BID.

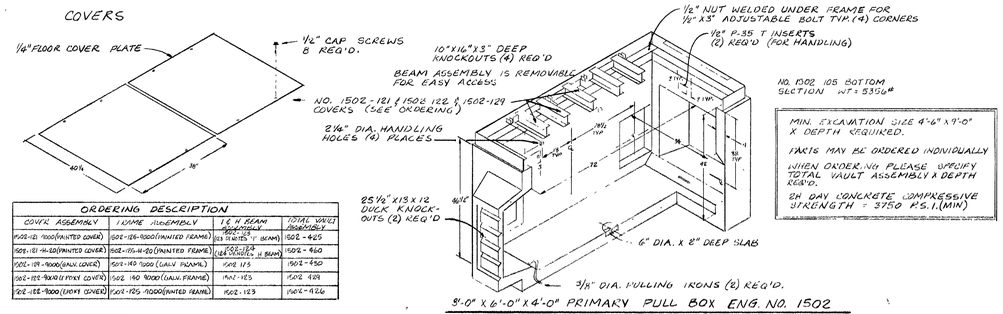


| ORDERING DESCRIPTION | | | |
|---|---|---|---|
| COVER ASSEMBLY | FRAME ASSEMBLY | 1/2 H BEAM ASSEMBLY | TOTAL VAULT ASSEMBLY |
| 1502-121-1000 (PAINTED COVER) | 1502-125-1000 (PAINTED FRAME) | 1502-123 (2 REQ'D) | 1502-425 |
| 1502-121-14-20 (PAINTED COVER) | 1502-125-14-20 (PAINTED FRAME) | 1502-123 (2 REQ'D) | 1502-420 |
| 1502-129-1000 (GALV. COVER) | 1502-140-1000 (GALV. FRAME) | 1502-123 | 1502-450 |
| 1502-122-1000 (1/4" PLEXY COVER) | 1502-140-1000 (GALV. FRAME) | 1502-123 | 1502-428 |
| 1502-122-1000 (LIGHT COVER) | 1502-125-1000 (PAINTED FRAME) | 1502-123 | 1502-426 |

9'-0" X 6'-0" X 4'-0" PRIMARY PULL BOX ENG. NO. 1502

NOT TO SCALE

## LIGHTING FIXTURE SCHEDULE

| MARK | MANUFACTURER & CAT. Nº | LAMPS | MTG. | MTG. HT. | FINISH | REMARKS |
|---|---|---|---|---|---|---|
| L-1 | LITE-TREND T31143-BRASS | 2-60W/IF | SURFACE | CEILING | BRASS | OPAL DRUM |
| L-2 | LITHONIA UN240 | 2-F40/T12/WWX | SURFACE | SEE DETAIL & SHEET A-3 | WHITE | STRIP LIGHT |
| L-3 | LITE-TREND | 60W/IF | ON WALL | NEAR CEILING | ANTIQUE BRASS | HALL BRACKET |
| L-4 | LITHONIA LB440A | 4-F40/T12/CW | SURFACE | CEILING | WHITE | ACRYLIC WRAP |
| L-5 | LITHONIA UN296 | 2-F96/T12/CW | ↓ | ↓ | ↓ | STRIP FLUOR. |
| L-6 | KEENE/STONCO YSB 200 | 150W/IF | | | | SHALLOW DOME RLM |
| L-7 | KEENE/STONCO VW-1GC | 100W/IF | | | STD. | VAPOR TIGHT BRACKET |
| L-8 | HALO H2813 | 2-100W/IF | | | CHROME | OPAL DRUM |
| L-9 | HALO H37-401 | 250W/R40 INFRARED | ↓ | ↓ | AL | HEAT LAMP |
| L-10 | BRYANT 5228 | 100W/IF | SURFACE | AS DETAILED | WHITE | SPECIAL ARCHITECTS ENCLOSURE |
| L-11 | LITHONIA LB240A | 2-F40/T12/CW | SURFACE | CEILING | WHITE | ACRYLIC WRAPAROUND |
| L-12 | KENALL 3663 TAMPERPROOF W/SCREWS & DRIVER TOOL | 100W/IF | ON WALL | 7'-6" | WHITE | VANDAL RESISTANT W/ 3 DRIVER TOOLS |
| L-13 | HALO H2421 | 100W/IF | ON WALL | OVER MIRROR | AL | ACORN |
| L-14 | BRYANT 5228 | 100W/IF | SURFACE | CEILING | WHITE | PORCELAIN LAMP HOLDER |
| L-15 | LITHONIA UN496 | 4-F96/T12/CW | ↓ | ↓ | ↓ | STRIP FLUOR. |
| L-16 | HALO H7-410 | 75W/R30 | RECESSED | CEILING | WHITE | DOWN LIGHT |

## LEGEND

| SYMBOL | DESCRIPTION |
|---|---|
| (A) | TOP SECTION |
| (B) | EXTENSION SECTION |
| (C) | BOTTOM SECTION |
| (D) | KNOCKOUT-VARIOUS SIZES AVAILABLE |
| (E) | KNOCKOUT-VARIOUS SIZES AVAILABLE |
| (F) | SUMP-VARIOUS SIZES AVAILABLE |
| (G) | PULLING INSERTS |
| (H) | ARMOR FRAME |
| 1 | DESIGNED FOR H-20-44 BRIDGE LOADING |
| 2 | ASSEMBLY TO BE PLACED ON 6" BASE COMPACTED ROCK TO ENSURE UNIFORM DISTRIBUTION OF SOIL PRESSURES ON PAVE. |
| 3 | FOR COVERS, SEE COVER AND FRAME SECTION. |
| 4 | CONTACT BROOKS PRODUCTS. ALL DISTRIBUTION OF FITTING SHOULD BE WITH BROOKS EQUIPTION. FOR SPECIFICS, CONTACT GENERAL TELEPHONE |

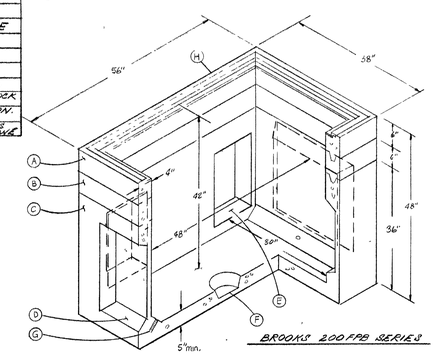


BROOKS 200FPB SERIES

TELEPHONE DISTRIBUTION PULL BOX

NOT TO SCALE

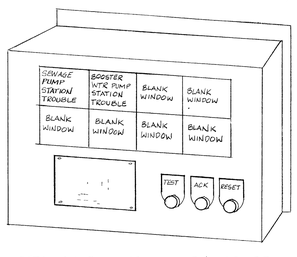


BETA 1011-B IN NEMA 1 ENCLOSURE WITH TEST/ACKNOWLEDGE/RESET PUSH BUTTONS AND 10-871 FLUSH MOUNTED HORN
INPUT VOLTAGE = 117 VAC, 1Ø, 60 Hz
ALL DROPS SUITABLE FOR N.O. SERVICE.
** (SEE MGF. WIRING DIAGRAM SHIPPED WITH ANNUCIATOR FOR EXACT FIELD WIRING INSTRUCTIONS.) (@ RANGER STATION & SHOP Nº 2)

117 VAC FROM ANNUNCIATOR — 117 VAC TO WINDOW DROP ON ANNUCIATOR

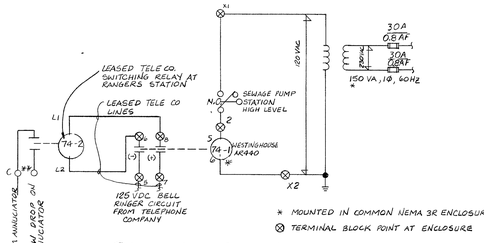


* MOUNTED IN COMMON NEMA 3R ENCLOSURE (@ SEWAGE PMP. STA.)

⊗ TERMINAL BLOCK POINT AT ENCLOSURE

SEWAGE LIFT STATION
ELEM DIAGRAM
HIGH LEVEL ALARM

NOT TO SCALE

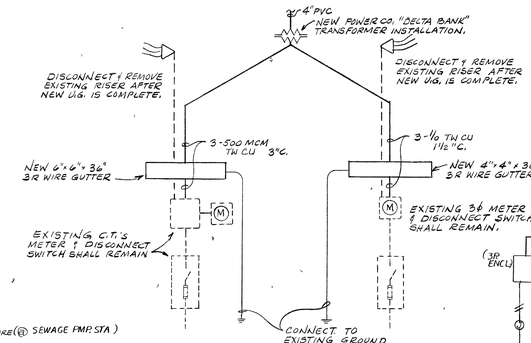


EXISTING GUN CLUB - PARTIAL
SINGLE LINE DIAGRAM

NOT TO SCALE

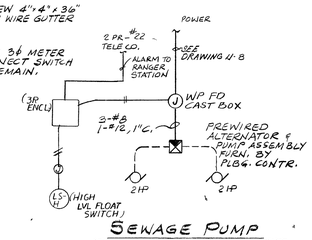


SEWAGE PUMP
SINGLE LINE DIAGRAM

NOT TO SCALE

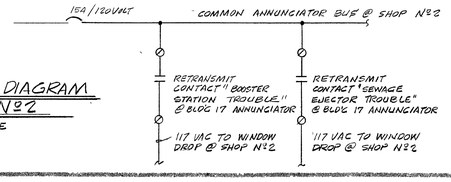


ELEM. DIAGRAM
SHOP Nº2

NOT TO SCALE

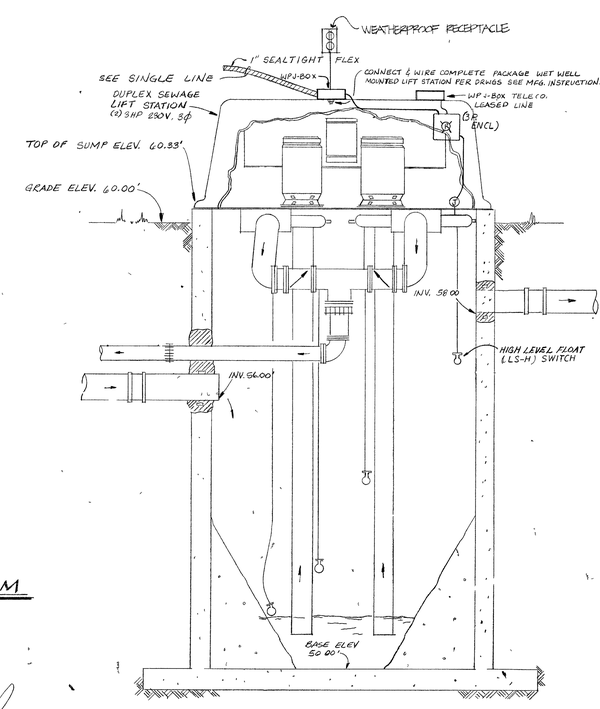


DUPLEX SEWAGE PUMP DETAIL

NOT TO SCALE

101361

CHARLES SALADINO LANDSCAPE ARCHITECT-ASLA-LTD
JAMES H. GLOVER CONSULTING ENGINEER
4040 W. PIONEER AVENUE SUITE 201
LAS VEGAS, NEVADA 89102 (702) 876-3374

# SYMBOLS — FIXTURE SCHEDULE & DETAILS

FLOYD LAMB STATE PARK at TULE SPRINGS LAS VEGAS, NEVADA PHASE 1-B & 2
NEVADA DIVISION OF STATE PARKS 1395 HASKELL ST - SUITE C - RENO NEVADA - 89509 - 702-786-6500

SHEET U-10