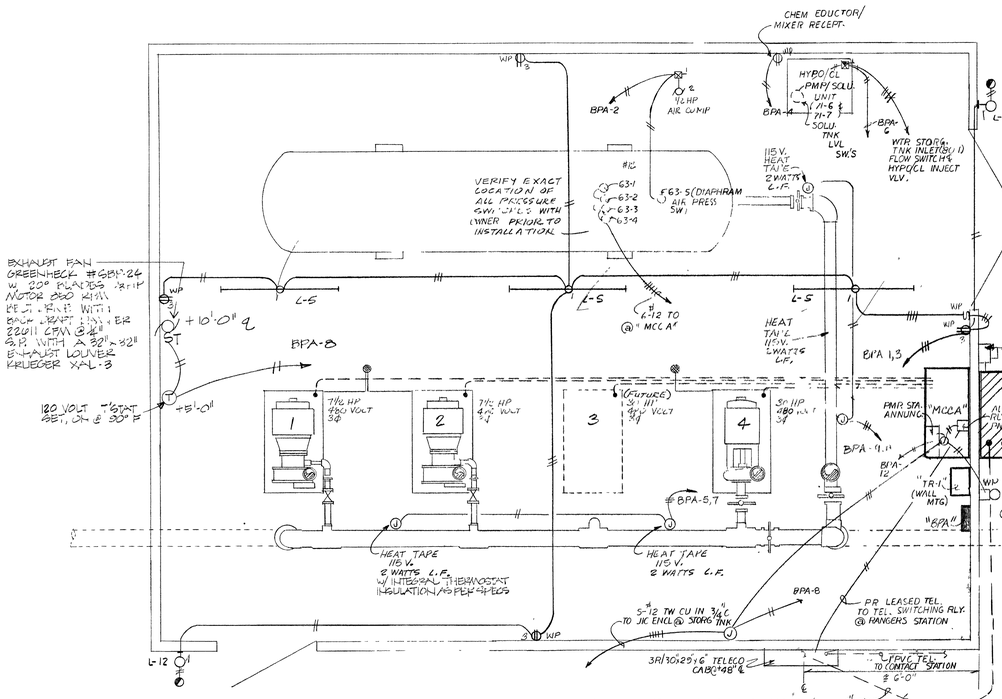

PLAN - BOOSTER PUMP STATION BELOW ELEVATION 74.50'

SCALE 1/2" = 1'-0"

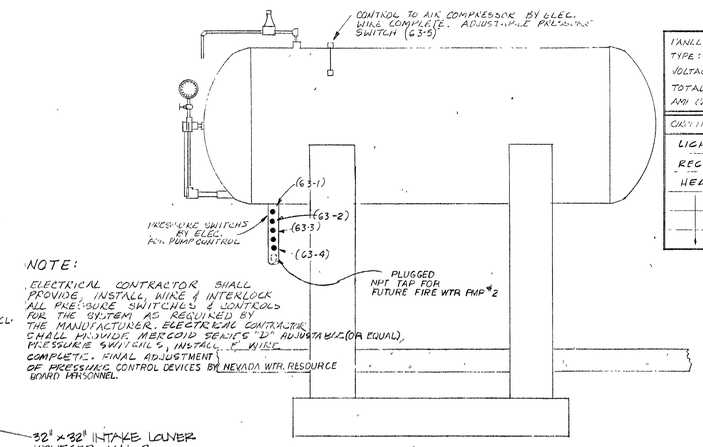

NOTE:

ELECTRICAL CONTRACTOR SHALL PROVIDE, INSTALL, WIRE & INTERLOCK ALL PRESSURE SWITCHES & CONTROLS FOR THE SYSTEM AS REQUIRED BY THE MANUFACTURER. ELECTRICAL CONTRACTOR SHALL PROVIDE MERCOID SERIES "DA" HOUSTAT BULB (OR EQUAL) PRESSURE SWITCHES, INSTALL & WIRE COMPLETE. FINAL ADJUSTMENT OF PRESSURE CONTROL DEVICES BY NEVADA WTR. RESOURCE BOARD PERSONNEL.

EAST ELEVATION

HYDRO-PNEUMATIC PRESSURE TANK

(NO SCALE)

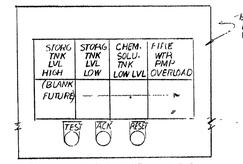

PMP STA. ANNUNCIATOR WINDOW ENGRAVING

(NO SCALE)

PANEL "BPA" SCHEDULE

TYPE: NEMA 3R LOADS: MTR. BLACING: 10 KA (MIN)

VOLTAGE: 120/208 3φ 4W MOUNTING: SURFACE MAIN: 100A MAIN BRKR

TOTALS: φA 3327 φB 3700 φC 3500 = 10527 VA

AMP CALC. 10527 ÷ 208 √3 = 30 × 1.25 = 38 AMPS

CKT #	CIRCUIT DESCRIPTION	BRK	P/N	φA	φB	φC	P/N	BRK	CIRCUIT DESCRIPTION
1	LIGHTING	20/1	L	1000 / 1127				20/1	AIR COMP
3								1	
5	RECEPTACLES				1200	1500		1	CHEM. MIXER/EDUCTOR
7								1	
9	HEAT TAPE						1000 / 300	1	HYPO/CL PMP/SOLU UNIT
11				1000 / 200				15/1	WTR. STORG. TNK LVL UNIT
13					1000			1	SPARE
15						1000 / 1200		1	ANNUNCIATOR

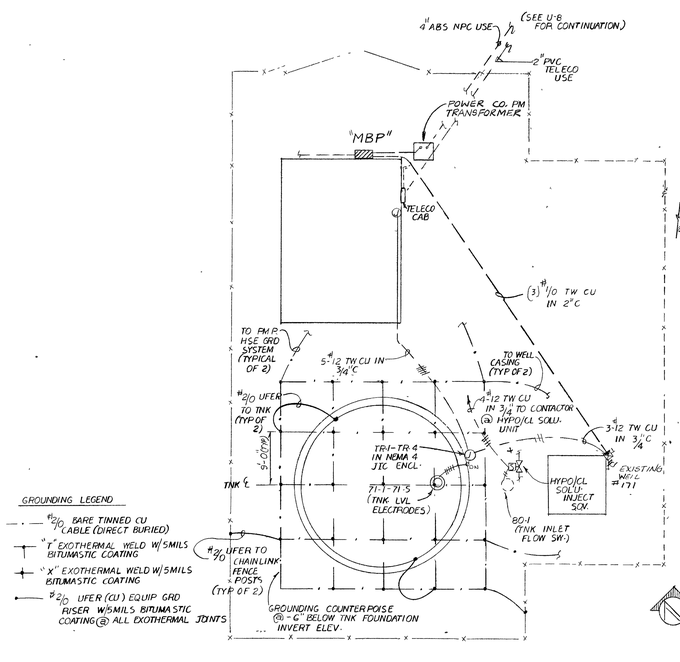

PARTIAL SITE - BOOSTER PUMP STATION

SCALE: 1" = 10'

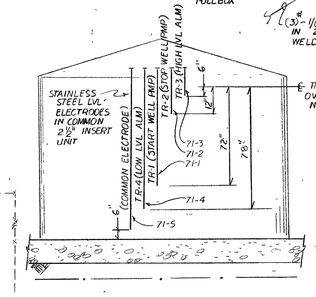

LVL. ELECTRODES AT WTR. STORG. TNK.

(NO SCALE)

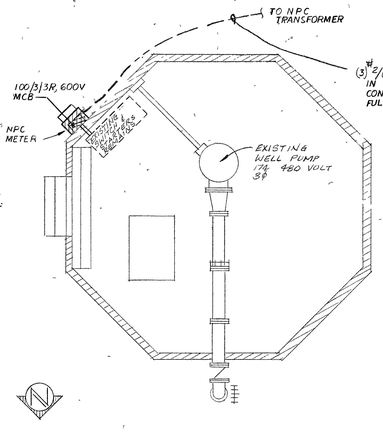

PLAN - WELL 174

SCALE: 3/8" = 1'-0

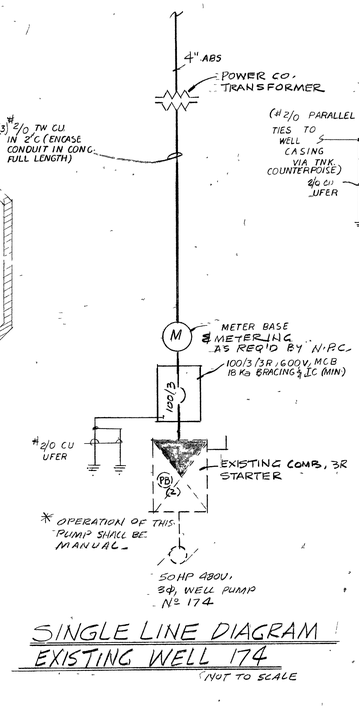

SINGLE LINE DIAGRAM

EXISTING WELL 174

NOT TO SCALE

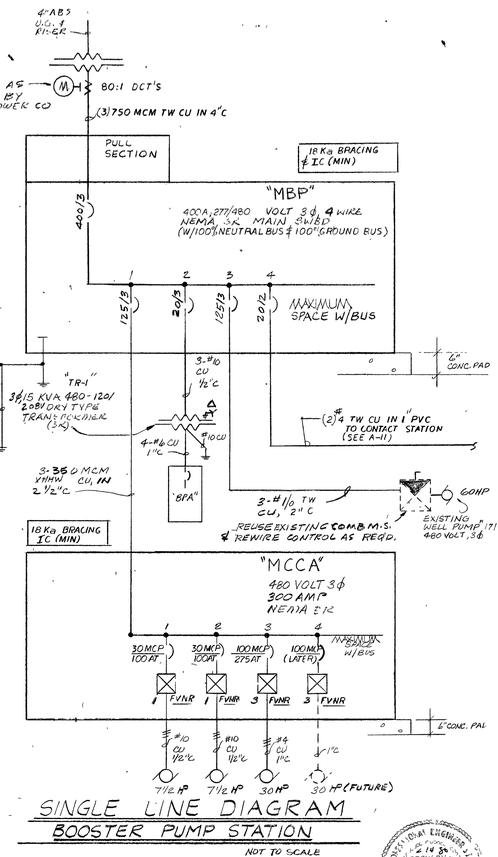

SINGLE LINE DIAGRAM

BOOSTER PUMP STATION

NOT TO SCALE

CHARLES SALADINO-LANDSCAPE ARCHITECT-ASLA-LTD
JAMES H. GLOVER
4040 W. PIONEER AVENUE
LAS VEGAS, NEVADA 89102
CONSULTING ENGINEER
SUITE 201
(702) 876-3374

ELECTRICAL PLAN & DETAILS - WELL 174

FLOYD LAMB STATE PARK at TULE SPRINGS (LAS VEGAS NEVADA)

NEVADA DIVISION OF STATE PARKS 1395 HASKELL ST. - SUITE C - RENO, NEVADA - 89509 - 702-786-2580

PHASE 1-B & 2

SHEET U-12

101363