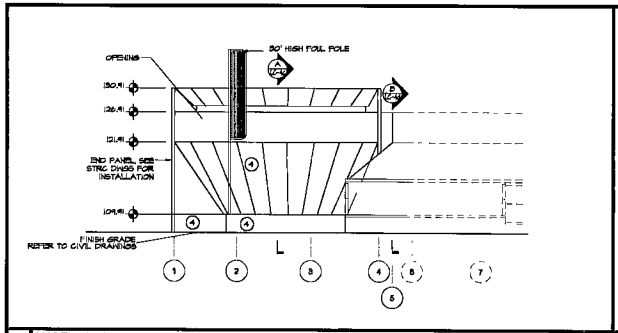

A ANGEL STADIUM INTERIOR ELEVATION
COLUMN 1 - 8
SCALE: 1/8"=1'-0"

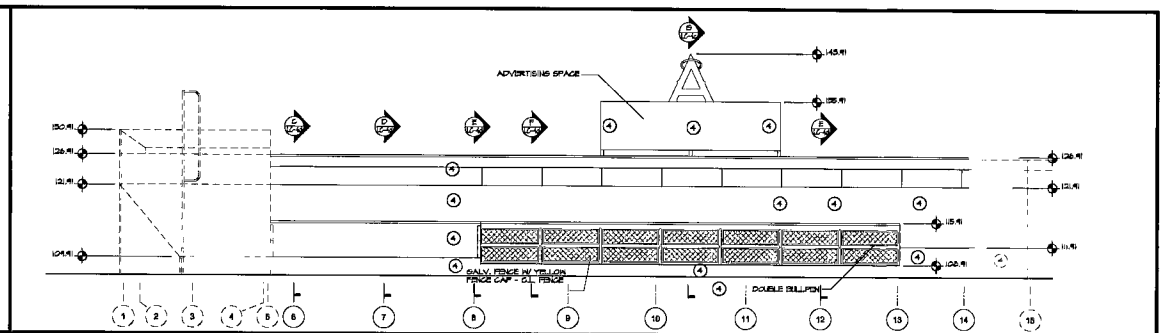

B ANGEL STADIUM INTERIOR ELEVATION
COLUMN 8 - 15
SCALE: 1/8"=1'-0"

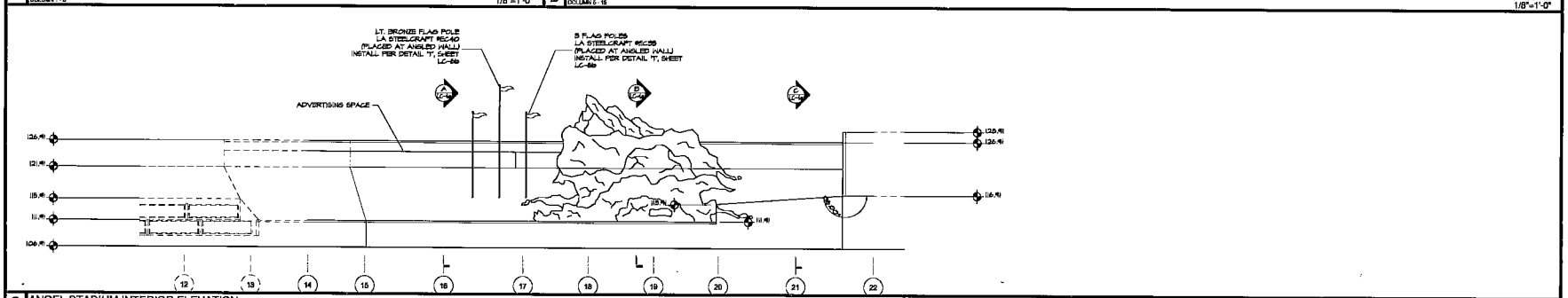

C ANGEL STADIUM INTERIOR ELEVATION
COLUMN 15 - 22
SCALE: 1/8"=1'-0"

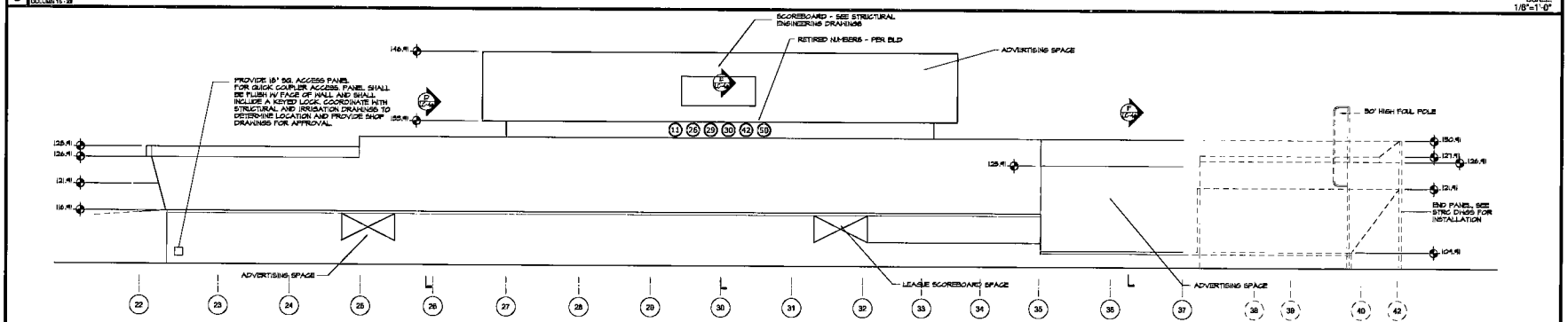

D ANGEL STADIUM INTERIOR ELEVATION
COLUMN 22 - 42
SCALE: 1/8"=1'-0"

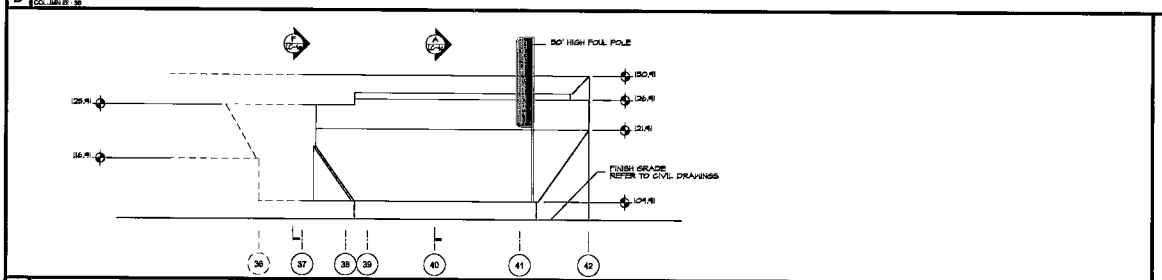

E ANGEL STADIUM INTERIOR ELEVATION
COLUMN 36 - 42
SCALE: 1/8"=1'-0"

ANGEL STADIUM - PAINT SCHEDULE

CALLOUT	PAINT MFG.	PAINT CODE/NAME
1	VISTA PAINT	CASINO GREEN - CUSTOM COLOR - SEE FORMULA BELOW
3	VISTA PAINT	08 - 'BLACK' - FLAT
4	VISTA PAINT	8877 - 'SOFT BUCKSKIN' - FLAT

VISTA PAINT
(702) 841-3000
www.vistapaint.com

CASINO GREEN BY VISTA
BASE - 20A
FORMULA - 4
B - 23
C - 12
D - 39
KX - 25

NOTE:
1. DESIGN BUILDER TO SUBMIT SAMPLES OF ALL PAINT TO CITY'S REPRESENTATIVE FOR FINAL APPROVAL.

F PAINT SCHEDULE
SCALE: N.T.S.

12|281

Dekker Perich Sabatini
architecture interiors planning engineering
8900 Burnside Road, Ste. 100
Las Vegas, Nevada 89119
702.436.1008
fax 436.1030
info@dpsdesign.org

PBSJ
ENGINEERING PLANNING ENVIRONMENTAL CONSTRUCTION SERVICES
2370 Corporate Circle
Suite 200
Henderson, Nevada 89074
Telephone: 702.243.7777
Fax: 702.243.7738

CITY OF LAS VEGAS
FREEDOM PARK RENOVATION
850 NORTH MOJAVE, LAS VEGAS, NEVADA 89101
BIG LEAGUE DREAMS - ANGEL STADIUM - INTERIOR ELEVATIONS

100%
OWNER REVIEW

OWNER: CITY OF LAS VEGAS
DEPARTMENT OF PUBLIC WORKS
ARCHITECTURAL SERVICES
495 EAST STEWART AVENUE
LAS VEGAS, NEVADA 89101
PHONE: (702) 229-6269
FAX: (702) 229-6299
TDD: (702) 386-9108

JOB: 3068-LC-4b
DATE: FEBRUARY 13, 2006
SCALE: AS NOTED
PLAN ID: 370354
CLI DWG ID: 650.22-18

LC-4b