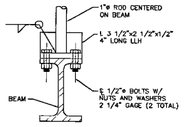

DETAIL "B"
NO SCALE

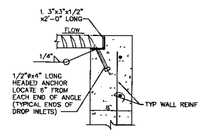

SECTION "B"
NO SCALE

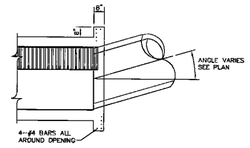

ALTERNATE CONNECTION DETAIL
NO SCALE

NOTES:

1. ALL EXPOSED METALS SHALL BE HOT DIP GALVANIZED AFTER FABRICATION.
2. PROVIDE 1/2" (MIN.) CLEARANCE ALL AROUND THE STEEL BEAM, DRY PACK AFTER INSTALLATION.
3. WHEN REQUIRED BY LENGTH OF OPENING, PLATE ANGLE MAYBE REINVERED IN SECTIONS AND BUTT WELDED IN PLACE.
4. ALL GALVANIZING DAMAGED BY WELDING SHALL RECEIVE TWO COATS OF GALVALLOY OR EQUAL.
5. CONCRETE SHALL BE MODIFIED CLASS DA, SEE SPECIAL PROVISIONS SECTION 501.

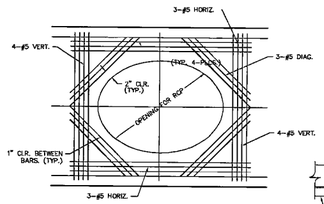

SECTION "A"
NO SCALE

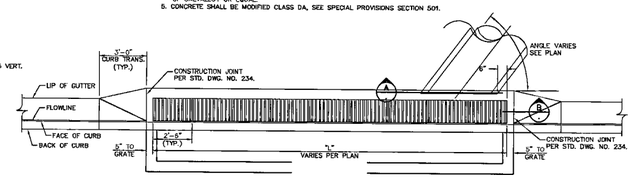

DROP INLET LAYOUT PLAN
NO SCALE

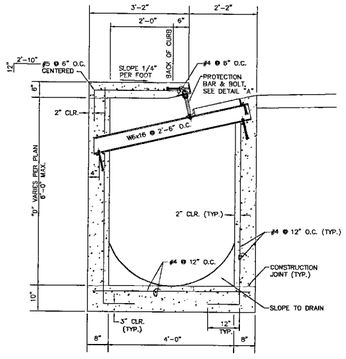

DROP INLET SECTION
NO SCALE

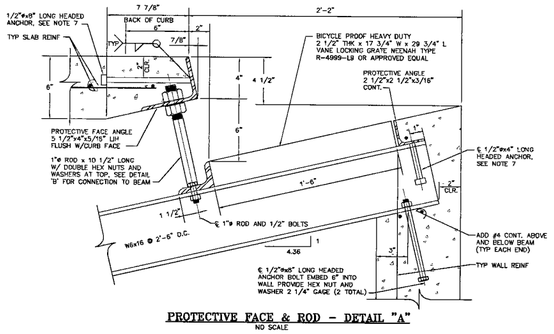

PROTECTIVE FACE & ROD - DETAIL "A"
NO SCALE

TYPE "CM" DROP INLET DETAIL
NO SCALE

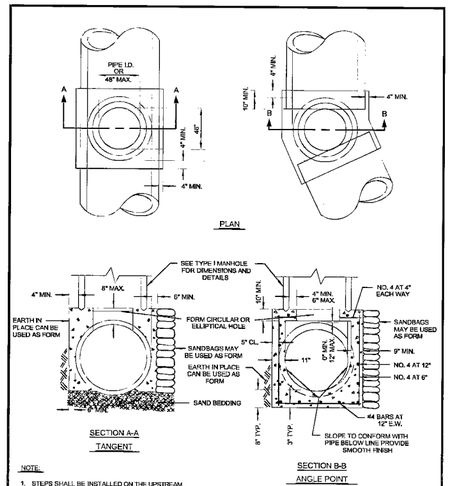

NOTE:

1. STEPS SHALL BE INSTALLED ON THE UPSTREAM WALL OF THE MANHOLE

SPECIFICATION REFERENCE		UNIFORM STANDARD DRAWINGS CLARK COUNTY AREA		
501	CONCRETE	TYPE III MANHOLE		
505	REINFORCING STEEL			
609	CATCH BASINS, MANHOLES & INLETS			
		DATE	DWG. NO. 406	PAGE NO. 106

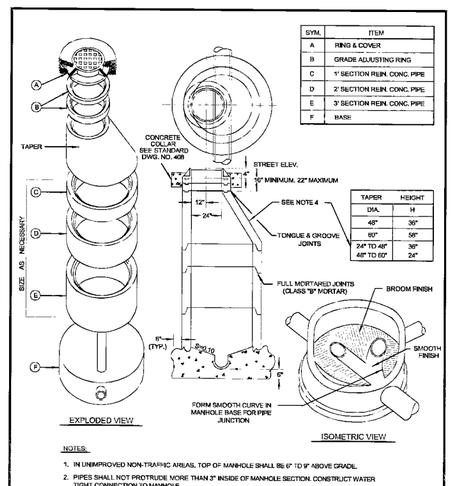

SYM.	ITEM
A	RING & COVER
B	GRADE ADJUSTING RING
C	1' SECTION REIN. CONC. PIPE
D	2' SECTION REIN. CONC. PIPE
E	3' SECTION REIN. CONC. PIPE
F	BASE

TAPER	HEIGHT
DIA.	H
48"	36"
60"	36"
24" TO 48"	36"
48" TO 60"	24"

NOTES:

1. IN UNIMPROVED NON-TRAFFIC AREAS, TOP OF MANHOLE SHALL BE 6" TO 9" ABOVE GRADE.
2. PIPES SHALL NOT PROTRUDE MORE THAN 3" INSIDE OF MANHOLE SECTION. CONSTRUCT WATER TIGHT CONNECTION TO MANHOLE.
3. PIPE SECTION LENGTHS ARRANGED TO FIT DEPTH.
4. AN OPTIONAL TWO PIECE 24" TO 48" AND 48" TO 60" CONE MAY BE USED.

SPECIFICATION REFERENCE		UNIFORM STANDARD DRAWINGS CLARK COUNTY AREA		
501	CONCRETE & MORTAR	TYPE I MANHOLE		
609	CATCH BASINS, MANHOLES & INLETS			
		DATE 11-10-05	DWG. NO. 403	PAGE NO. 103

ACO drain

DRWG# 1240 Date: 11.21.00
WWW.ACOUSA.COM

INSTALLATION DRAWING

K100S: Load Class A–C : Concrete Finish

ACO Polymer Products Inc.
P.O. Box 245
Chardon, OH 44024
PH: 440-285-7000
FX: 440-285-8517
e-mail: sales@acousa.com

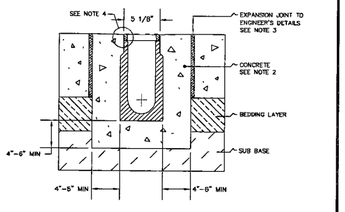

NOTES:
1. It is necessary to ensure the minimum dimensions shown are suitable for the existing ground conditions. Engineering advice may be required.
2. A minimum concrete strength of 3000 PSI is recommended.
3. Expansion and crack control joints are recommended to protect the channel and the concrete surround. Engineering advice may be required.
4. The finished level of the concrete surround must be approx. 1/8" above the top of the channel edge.
5. Refer to ACO'S latest installation instructions for complete details.

1 C2.08 ACO K100S TRENCH DRAIN DETAIL
N.T.S.

ACO drain

DRWG# 1240 Date: 11.21.00
WWW.ACOUSA.COM

SPECIFICATION CLAUSE

K100S Trench Drain System

ACO Polymer Products Inc.
P.O. Box 245
Chardon, OH 44024
PH: 440-285-7000
FX: 440-285-8517
e-mail: sales@acousa.com

The surface drainage system shall be polymer concrete K100S channel system with galvanized steel or stainless steel K-rails as manufactured by ACO Polymer Products, Inc., Chardon, Oh.

Channels shall be manufactured from polyester resin polymer concrete with an integrally cast-in galvanized steel or stainless steel edge rail.

The system shall be 4 inches (100mm) nominal inside width with a 6.1 in. (155mm) overall width and a built-in slope of 0.8%. All channels shall be interlocking with a male/female joint. Each channel shall have preformed 4 in. (100mm) round and 6 in. (150mm) oval drill-outs on the bottom for vertical connection with underground piping.

The complete drainage system shall be by ACO Polymer Products, Inc. Any deviation or partial system design and/or improper installation will void any and all warranties provided by ACO Polymer Products, Inc.

Channel shall withstand loading to Load Class _____ *(DIN 19 580). Grate type shall be appropriate to meet the system load class specified and intended application. Grates shall be secured by means of either a boltless locking "Quicklok" device or locking bolt and bar. Channel and grate shall be independently certified to meet the specified DIN 19580 load class.

Polymer Concrete shall have material properties of: compressive strength range between 14,000–14,500 psi; flexural strength between 3600–4500 psi; tensile strength of 1500 psi. The material water absorption rate shall not exceed 0.1% by weight and shall be resistant to prolonged salt exposure, repetitive frost cycles and chemically resistant to dilute acids and alkalis.

The system shall be installed in accordance with the manufacturer's instructions and recommendations.
*Fill in as required.

ACO drain

DRWG# 1649 Date: 3.12.03
WWW.ACOUSA.COM

INSTALLATION DRAWING

630 CB: Load Class A–C : Concrete Finish

ACO Polymer Products Inc.
P.O. Box 245
Chardon, OH 44024
PH: 440-285-7000
FX: 440-285-8517
e-mail: sales@acousa.com

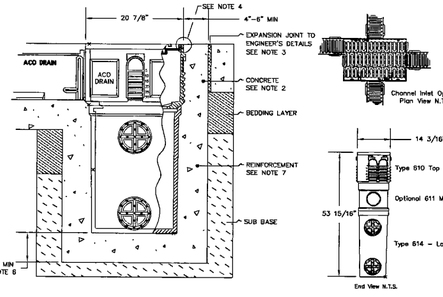

NOTES:
1. It is necessary to ensure the minimum dimensions shown are suitable for the existing ground conditions. Engineering advice may be required.
2. A minimum concrete strength of 3000 PSI is recommended. The concrete should be vibrated to eliminate air pockets.
3. Expansion and crack control joints are recommended to protect the catch basin and the concrete surround. Engineering advice may be required.
4. The finished level of the concrete surround must be approx. 1/8" above the top of the catch basin edge.
5. Refer to ACO'S latest installation instructions for complete details.
6. Concrete base thickness should match the slab thickness.
7. Rebar or steel mesh reinforcement may be required. Engineering advice may be required.

ACO drain

DRWG# 1649 Date: 3.12.03
WWW.ACOUSA.COM

SPECIFICATION CLAUSE

630 Catch Basin System

ACO Polymer Products Inc.
P.O. Box 245
Chardon, OH 44024
PH: 440-285-7000
FX: 440-285-8517
e-mail: sales@acousa.com

The catch basin shall be ACO Drain 630 series made from polymer concrete with a cast-in ductile and steel rail as manufactured by ACO Polymer Products, Inc., Chardon, Oh.

The 630 series catch basin will be used in conjunction with 4" ACO DRAIN trench drain model type K100S

The 630 series catch basin – comprising of 610 top section, ductile iron PowerLok grate, 611 middle section (optional), 614 long base and trash bucket. The catch basin shall accept 4" ACO DRAIN trench drain in sides as shown above.

The catch basin shall be 19.69 in. (500mm) nominal inside length with a 11.81 in. (300mm) nominal inside width. 630 catch basin depth is 53.94 in. (1370mm)

The complete catch basin and trench drainage system shall be by ACO Polymer Products, Inc. Any deviation or partial system design and/or improper installation will void any and all warranties provided by ACO Polymer Products, Inc.

630 series catch basin shall withstand loading to Load Class F (DIN 19 580). Grate shall be ductile iron slotted and bolted in place with the boltless PowerLok system. Catch basin, Trench channel and grate shall be independently certified to meet the specified DIN 19580 load class.

Polymer Concrete shall have material properties of: compressive strength range between 14,000–14,500 psi; flexural strength between 3600–4500 psi; tensile strength of 1500 psi. The material water absorption rate shall not exceed 0.1% by weight and shall be resistant to prolonged salt exposure, repetitive frost cycles and chemically resistant to dilute acids and alkalis.

The system shall be installed in accordance with the manufacturer's instructions and recommendations.
*Fill in as required – see ACO Drain Trench spec sheets for additional info.

2 C2.08 ACO 630 CATCH BASIN DETAIL
N.T.S.

122954

REVISIONS		
1	10.20.2008	BLDG. DEPT. REVIEW #1
2	10.20.2008	OWNER CHANGES
3	11.07.2008	BLDG. DEPT. REVIEW #2
4	12.15.2008	BLDG. DEPT. REVIEW #3
5	01.24.2009	BLDG. DEPT. REVIEW #4
6	03.13.2009	OWNER CHANGES
7	03.20.2009	CMU WALL CHANGES
8	06.08.2009	CONTRACTOR CHANGES
9	06.26.2009	CONTRACTOR CHANGES
10	09.22.2009	CONTRACTOR CHANGES
11	01.31.2010	RECORD DRAWINGS

architecture interior planning engineering
Dekker Perich Sabatini
6880 Bermuda Road, Ste. 100
Las Vegas, Nevada 89119
702.436.1006
fax. 436.1050
info@dpsdesign.org

PBSJ
ENGINEERING PLANNING SURVEYING CONSTRUCTION SERVICES
2270 Corporate Circle
Suite 100
Henderson, Nevada 89074
Telephone: 702/253-7275
Fax: 702/253-7290

CITY OF LAS VEGAS
FREEDOM PARK RENOVATION
9850 NORTH MOJAVE, LAS VEGAS, NEVADA 89101
GENERAL DETAILS

Russ Mauger
Roche Constructors, Inc.

STAMP

RECORD DRAWINGS
01-31-2010

OWNER: CITY OF LAS VEGAS
DEPARTMENT OF PUBLIC WORKS
ARCHITECTURAL SERVICES

400 EAST STEWART AVENUE
LAS VEGAS, NEVADA 89101
PHONE: (702) 229-6011
FAX: (702) 384-8848
TDD: (702) 386-9108

DRAWN	
FILE	3006-C2.08d
DATE	FEBRUARY 13, 2009
SCALE	N.T.S.
BID NO	078354
CLV DWG NO	550.22-18
SHEET NO	SHEET 10 OF 78
	C2.08

RECORD DRAWING

RECORD DOCUMENTS ARE PREPARED FROM DATA AND INFORMATION SUPPLIED BY OTHERS. DEKKER/PERICH/SABATINI, LTD. DOES NOT CERTIFY, OR WARRANT IN ANY MANNER, THE ACCURACY OR COMPLETENESS OF RECORD DOCUMENTS. FOR THE PURPOSE FOR WHICH THEY INTEND TO USE THE INFORMATION, DEKKER/PERICH/SABATINI, LTD. IS NOT RESPONSIBLE FOR ANY PROBLEMS OR RELATED COSTS THAT MAY ARISE OUT OF THE USE OF RECORD DOCUMENTS.

THIS DOCUMENT, AND THE IDEAS AND DESIGNS INCORPORATED HEREIN, AS AN INSTRUMENT OF PROFESSIONAL SERVICE, IS THE PROPERTY OF DEKKER/PERICH/SABATINI LTD. THE CLIENT MAY NOT USE THE DRAWINGS AND SPECIFICATIONS ON OTHER PROJECTS OR FOR ADDITIONS TO THIS PROJECT BY OTHERS EXCEPT BY AGREEMENT IN WRITING BY AND WITH THE COMPENSATION TO BE AGREED TO BY DEKKER/PERICH/SABATINI LTD. THESE DRAWINGS AND SPECIFICATIONS ARE TO BE RETURNED UPON REQUEST. ALL REPRODUCTIONS, IN WHOLE OR IN PART, WITHOUT WRITTEN PERMISSION OF DEKKER/PERICH/SABATINI LTD. ARE PROHIBITED.