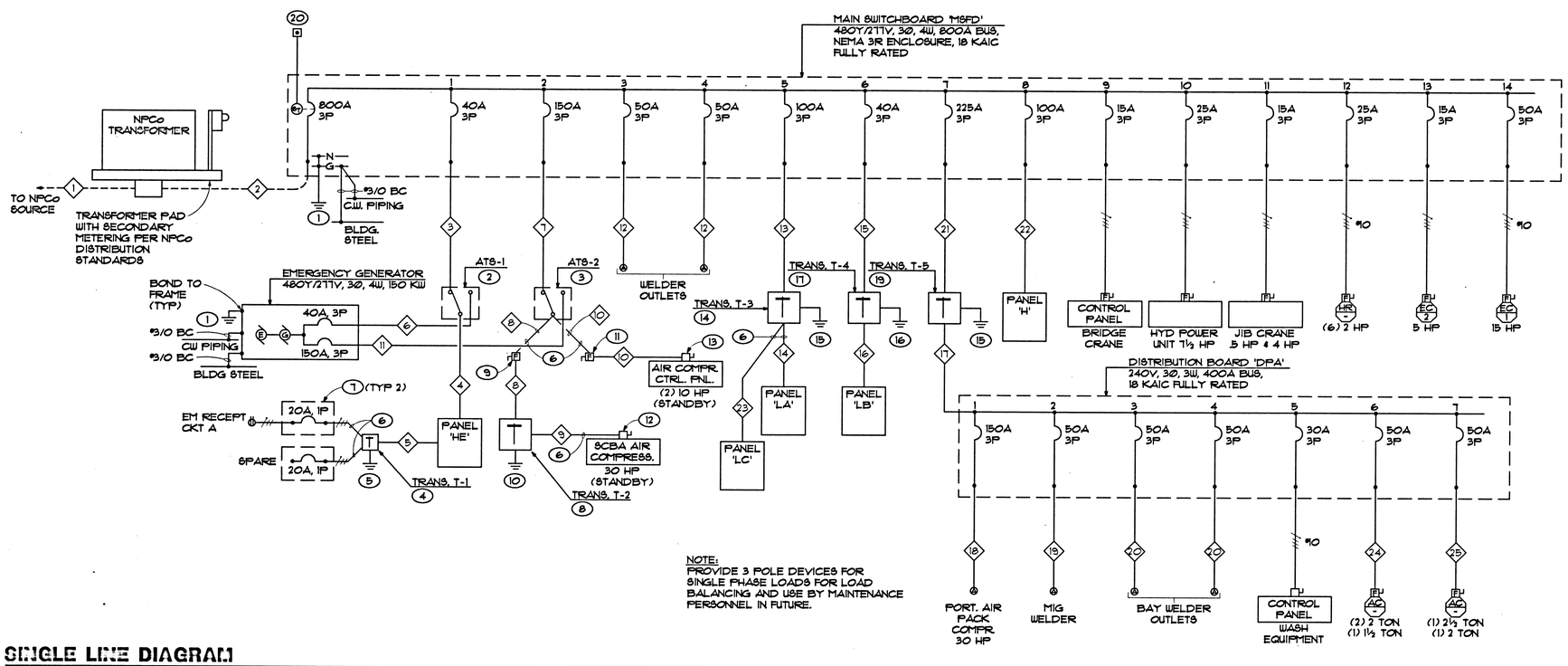

NOTE:
PROVIDE 3 POLE DEVICES FOR SINGLE PHASE LOADS FOR LOAD BALANCING AND USE BY MAINTENANCE PERSONNEL IN FUTURE.

SINGLE LINE DIAGRAM

NO SCALE

SHEET NOTES

1. PROVIDE CONCRETE ENCASED GROUNDING ELECTRODE ('UFER') CONSISTING OF 20' OF #3/0 BC INSTALLED PER NEC 250-81(c).
2. AUTOMATIC TRANSFER SWITCH, 100A, 4 POLE IN NEMA 1 ENCLOSURE.
3. AUTOMATIC TRANSFER SWITCH, 150A, 3 POLE IN NEMA 1 ENCLOSURE. SET TRANSFER DELAY AT 2 MINUTES TO ALLOW TRANSFORMER AND MOTOR CURRENTS TO DISSIPATE.
4. DRY TYPE TRANSFORMER COMPLETE WITH WALL MOUNTING BRACKETS, 5KVA, 480-120/240, 1Ø, 3W.
5. ½"C - 1#8 TO GROUND PER NEC 250-26(c).
6. INDICATED FEEDER SHALL COMPLY WITH NEC 240-21, EXC. 2 (10' TAP RULE).
7. PROVIDE 20A, 1 POLE CIRCUIT BREAKER COMPLETE WITH GP ENCLOSURE.
8. DRY TYPE TRANSFORMER, 45KVA, 480Δ- 240Δ, 3Ø, 3W.
9. 100A, 3 POLE, HD SAFETY SWITCH COMPLETE WITH GROUND BAR KIT AND 70A FUSES.
10. ½"C - 1#6 TO GROUND PER NEC 250-26(C).
11. SIMILAR TO (9) EXCEPT 60A AND 35A FUSES.
12. 100A, 3 POLE, HD, N/F SAFETY SWITCH COMPLETE WITH GROUND BAR KIT.
13. SIMILAR TO (12) EXCEPT 30A.
14. DRY TYPE TRANSFORMER, 75KVA, 480V - 120/240V, 1Ø, 3W.
15. ½"C - 1#2 TO GROUND PER NEC 250-26(c).
16. ½"C - 1#3 TO GROUND PER NEC 250-26(c).
17. DRY TYPE TRANSFORMER, 15KVA, 480V - 120/240V, 1Ø, 3W COMPLETE WITH WALL MOUNTING BRACKETS
18. NOT USED.
19. DRY TYPE TRANSFORMER 150KVA, 480V$^{\Delta}$ - 240V$^{\Delta}$, 3Ø, 3W COMPLETE WITH WEATHERSHIELDS.
20. PROVIDE SHUNT TRIP STATION ON OUTSIDE OF ENCLOSURE WALL FOR BUILDING SHUTDOWN.

FEEDER SCHEDULE

FEEDER NO	FROM	TO	CONDUIT AND WIRE (CU)
1	NPCo SOURCE	NPCo TRANSF.	(2) 4" EC
2	NPCo TRANSF.	MSFD	(3) 3" EACH W/4#350KCMIL
3	MSFD	ATS-1	1"C - 4#8 AND 1#10 GRD.
4	ATS-1	HE	1"C - 4#8 AND 1#10 GRD.
5	HE	T-1	½"C - 2#10
6	GENSET	ATS-1	1"C - 4#8 AND 1#10 GRD.
7	MSFD	ATS-2	1½"C - 3#1/0 AND 1#6 GRD.
8	AST-2	T-2	1"C - 3#4
9	T-2	SCBA COMPR.	2"C - 4#1/0 AND 1#8 GRD.
10	ATS-2	AIR COMPR.	1"C - 3#8 AND 1#10 GRD.
11	GENSET	ATS-2	1½"C - 3#1/0 AND 1#6 GRD.
12	MSFD	WELDERS	1"C - 3#8 AND 1#10 GRD,
13	MSFD	T-3	1½"C - 3#1/0 AND 1#8 GRD
14	T-3	LA	2½"C - 4#4/0 AND 1#2 GRD.
15	MSFD	T-4	1¼"C - 3#2 AND 1#8 GRD.
16	T-4	LB	1½"C - 3#2/0
17	T-4	DPA	3½"C - 4#500 KCMIL AND 1#2 GRD.
18	DPA	PORT. SCBA OUTLET	1¼"C - 3#1/0 AND 1#8 GRD.
19	DPA	MIG WELDER	1"C - 3#6 AND 1#10 GRD.
20	DPA	BAY WELDERS	1"C - 3#6 AND 1#10 GRD.
21	MSFD	T-5	2"C - 3#4/0
22	MSFD	H	1½"C - 4#2 AND 1#8 GRD.
23	T-3	LC	1½"C - 3#2 AND 1#8 GRD.
24	DPA	AC UNITS	¾"C - 2#6 AND 1#10 GRD.
25	DPA	AC UNITS	¾"C - 2#8 AND 1#10 GRD.

JMA ARCHITECTS, INC.

Architecture
Research and Planning
Interior and Graphic Design
Landscape Architecture

4292 S. Maryland Parkway
Las Vegas, Nevada 89119
(702) 739-2033

Consultants

HARRIS ENGINEERS, INC.
MECHANICAL/ELECTRICAL CONSULTANTS
3785 East Desert Inn Road, Suite 260
Las Vegas, Nevada 89121
702/798-0228

The Contractor shall check and verify all dimensions and report all errors and omissions to this office prior to commencing work. These drawings are not to be scaled.

Copyright 1992 JMA Architects & Engineers ©

Seal

Revisions

No.	Date	Description

Date 11-22-93
Drawn DEF
Checked FTH
Project No. 93115

Project

CITY OF LAS VEGAS

FIRE EQUIPMENT SERVICE CENTER (FESC)

Las Vegas, Nevada 89101

Drawing Title

FEEDER SCHEDULE AND SINGLE LINE DIAGRAM

Drawing No.

E-6

93062.00

Drawing No.

Project No.

42