3-13-17

ALTERNATE HEAT & COOL EQUIPMENT SCHEDULE

(1) CHILLER UNIT - GOVERNAIR MODEL CPS-20, OR EQUAL, CAPACITY 213,000 BTU/HR COOLING AT 105° CONDENSING, 85°F. EWT TO COND, CIRCULATING 53 GPM WATER AT 52° EWT & 44°F. LWT THRU CHILLER. COMPRESSOR MOTOR 20 H.P. 220 VOLT 3 PH. 60 CYC. UNIT COMPLETE WITH CHILLER, CONDENSER, COMPRESSOR, MOTOR, CONTROL PANEL, OPERATING & SAFETY CONTROLS, COMP PACKAGE.

(2) COOLING TOWER - MARLEY PF-20, OR EQUAL, CAPACITY 20 TONS COOLING AT 95°F EWT, 85°F. LWT AT 75°F. WB TEMP W/60 GPM. UNIT COMPLETE WITH ¾ H.P. MOTOR 220 VOLT 3 PH. 60 CYC.

(3) BOILER - A.O. SMITH "BURKAY" MODEL HV-420, OR EQUAL, CAPACITY 420,000 BTU/HR INPUT AT 3.5 INCHES W.C. MANIFOLD PRESS., GAS FIRED, COMPLETE WITH 100% SAFETY & OPERATING CONTROLS, AGA APPROVED, UNIT COMPLETE WITH 12" AMERIVENT TO O.S.A. WITH RJ & CAP.

(4) PUMP (CIRCULATING) - BARNES NO. LU 1½B-1½, OR EQUAL, TO DELIVER 53 GPM AT 45' TDH WITH 1½ H.P. MOTOR 220 VOLT 3 PH. 60 CYC.

(5) PUMP (COOLING TOWER) - BARNES NO. LU 1½B-1, OR EQUAL, TO DELIVER 60 GPM AT 35' TDH WITH 1 H.P. MOTOR 220 VOLT 3 PH. 60 CYC.

(6) A.C. UNIT - GOVERNAIR NO. GHC-2-13, OR EQUAL, CAPACITY 4000 CFM AT 1" S.P. WITH 1½ H.P. FAN MOTOR 220 VOLT 3 PH. 60 CYC., TO DELIVER 10 TONS COOLING AT 44°F EWT, 80°F DB & 67°F WB EAT. UNIT COMPLETE WITH CAB. INSULATION, HI. VEL. FILTERS, 4 ROW WATER COIL & MOTOR, BLOWERS & DRIVES.

(7) A.C. UNIT - GOVERNAIR NO. GHC-1-15, OR EQUAL, CAPACITY 2400 CFM AT ¾" S.P. WITH 1 H.P. FAN MOTOR 220 VOLT 3 PH. 60 CYC., TO DELIVER 7 TONS COOLING AT 44°F. EWT, 80°F DB & 67°F WB EAT. UNIT COMPLETE WITH CAB. INSUL., HI. VEL. FILTERS, 4 ROW WATER COIL & MOTOR, BLOWERS & DRIVES.

(8) A.C. UNIT - GOVERNAIR NO. GVC-1-10, OR EQUAL, CAPACITY 1200 CFM AT ¾" S.P. WITH ¾ H.P. FAN MOTOR 220 VOLT 3 PH. 60 CYC. TO DELIVER 3.3 TONS COOLING AT 44°F. EWT, 80°F DB & 67°F WB EAT. UNIT COMPLETE WITH CAB. INSULATION, HI VEL. FILTERS, 4 ROW WATER COIL & MOTOR, BLOWER & DRIVES.

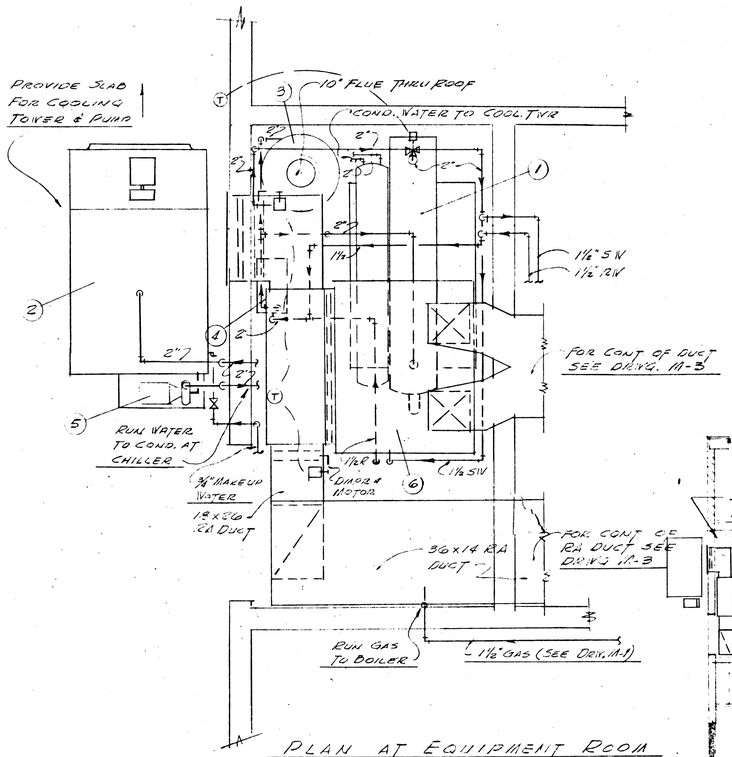

PLAN AT EQUIPMENT ROOM
SCALE ½" = 1'-0"

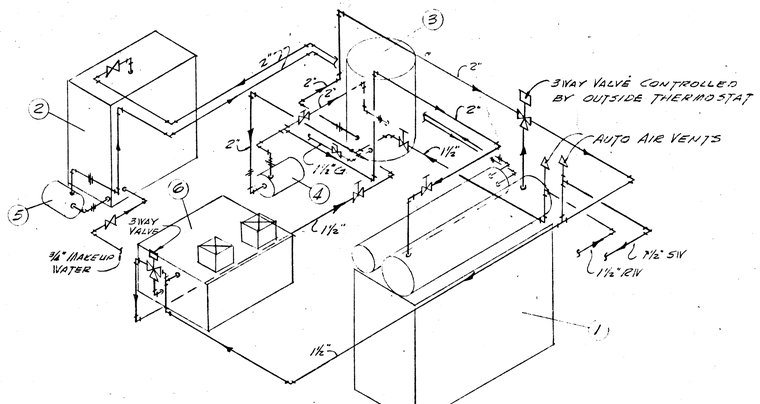

ISOMETRIC PIPING AT EQUIPMENT
NO SCALE

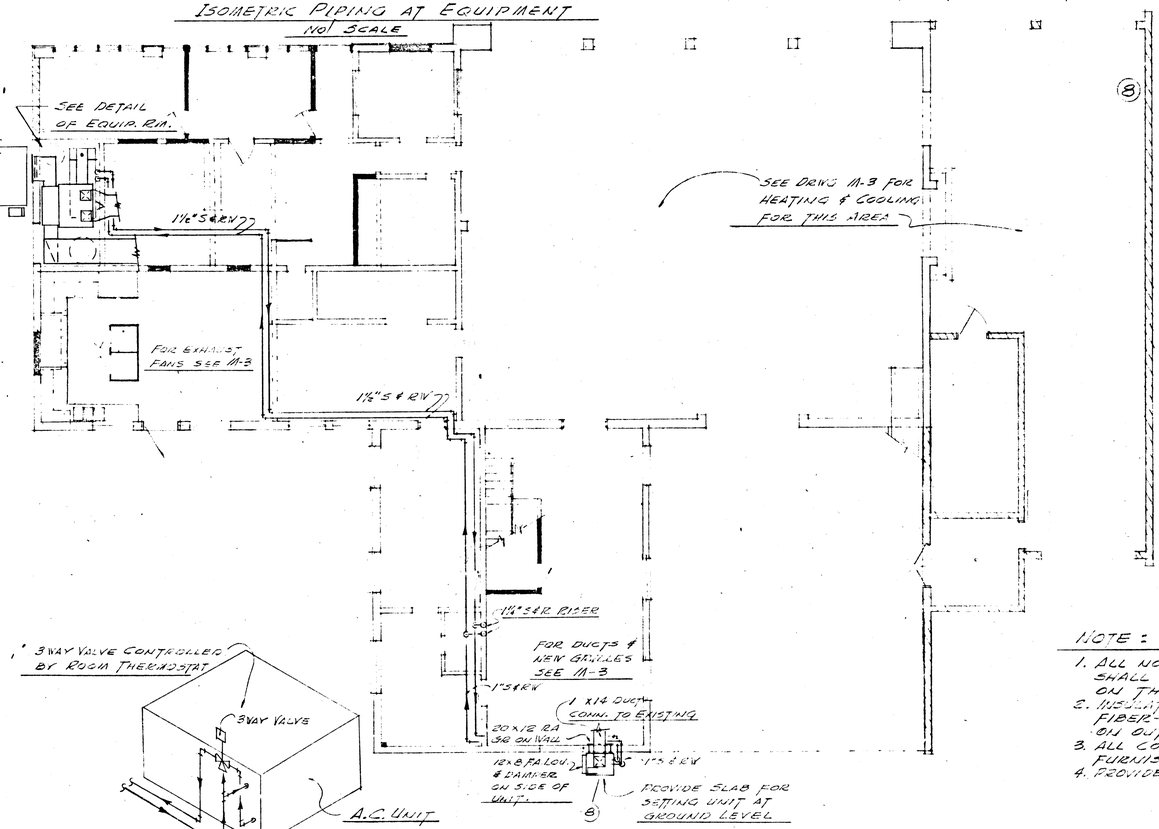

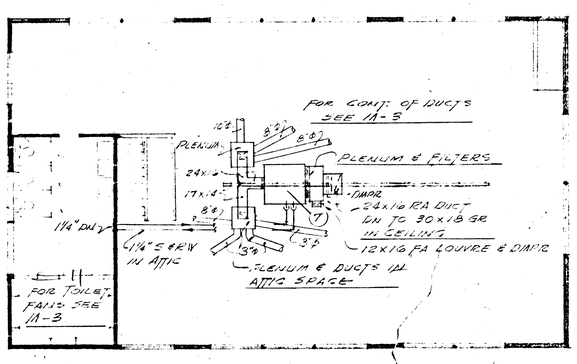

AIR CONDITIONING (ALTERNATE)

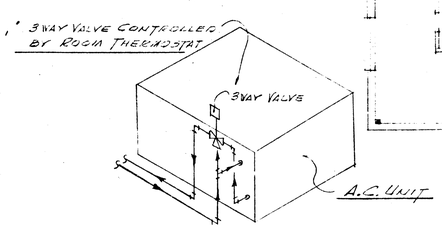

PIPING AT A.C. UNIT (TYPICAL ALL A.C. UNITS)
NO SCALE

FIRST FLOOR PLAN 1/8" = 1'-0"

SECOND FLOOR PLAN 1/8" = 1'-0"

NOTE:

1. ALL NOTES AS SHOWN ON DRWG. NO. M-3 SHALL COMPLY TO SYSTEMS AS SHOWN ON THIS SHEET.
2. INSULATE ALL WATER PIPING WITH J-M 1½" MICROLOK FIBER-GLASS & WEATHER PROOF WHERE EXPOSED ON OUTSIDE BLDG.
3. ALL CONTROLS TO BE MINN-HONEYWELL & TO BE FURNISHED & WIRED PER MFGRS. INSTRUCTIONS.
4. PROVIDE AIR VENTS AT HIGH POINTS OF WATER PIPING.

KEY
EXISTING WALLS
NEW BLOCK
NEW FRAME
WALL TO BE REMOVED

AIA
KNIGHTON & MC DANIEL
ARCHITECTS
2032 EAST CHARLESTON BLVD. • LAS VEGAS, NEVADA DU 4-4725

SHEET TITLE
JOB TITLE ALTERATION & ADDITION TO CENTRAL FIRE STATION
OWNER CITY OF LAS VEGAS
ADDRESS LAS VEGAS, NEVADA

JOB NUMBER C 124

REVISIONS 1 2 3 4 5 6 7 8

DRAWN BY RH
CHECKED
DATE 7/27/60
SHEET M4
OF 23

630-50