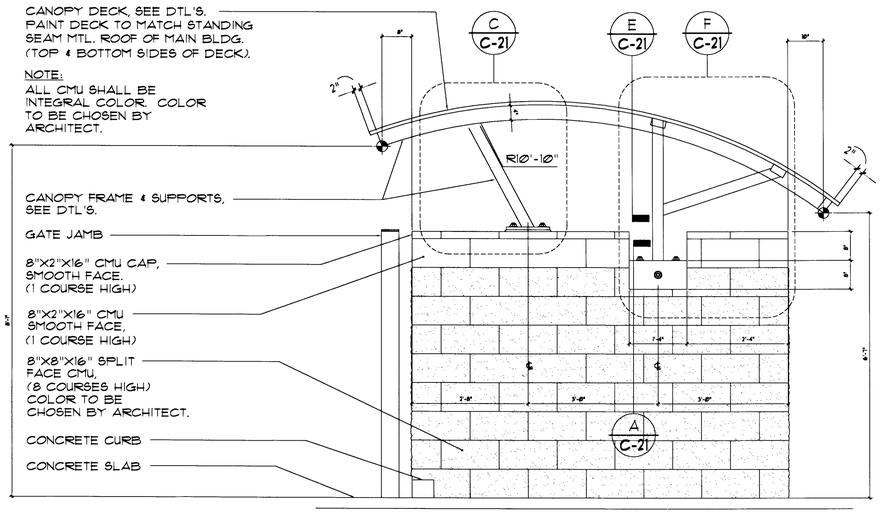

TRASH ENCLOSURE - SIDE ELEVATION (C / C20)

NTS

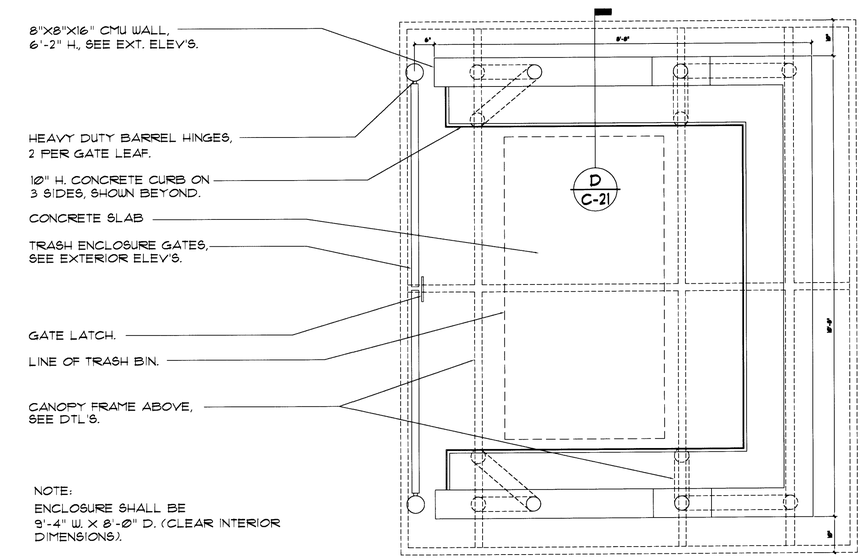

NOTE: ENCLOSURE SHALL BE 9'-4" W. X 8'-0" D. (CLEAR INTERIOR DIMENSIONS).

TRASH ENCLOSURE - PLAN VIEW (B / C20)

NTS

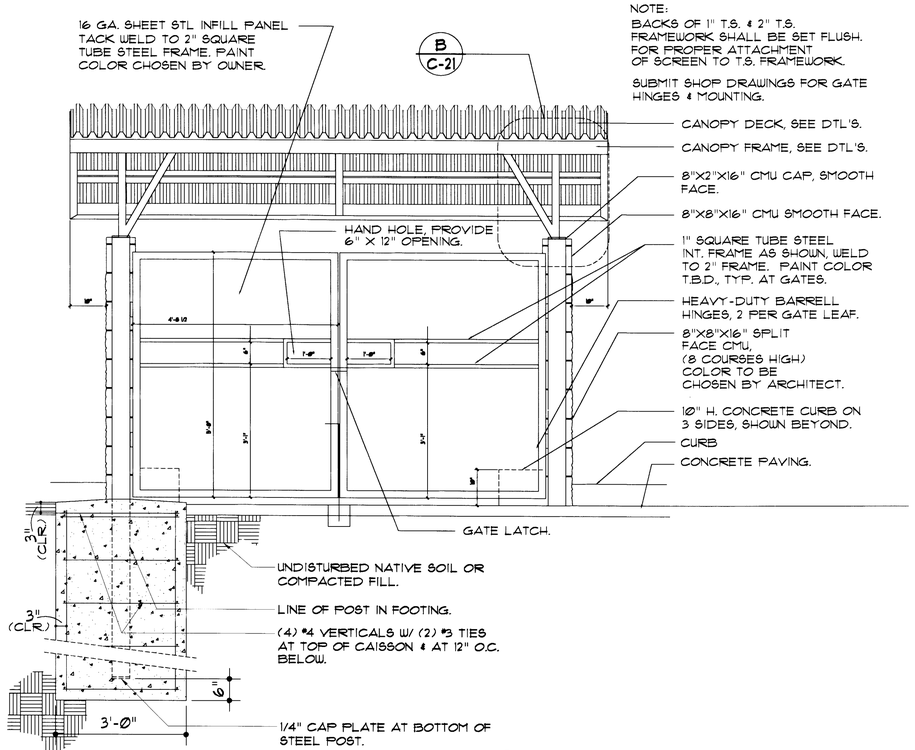

TRASH ENCLOSURE - FRONT ELEVATION (D / C20)

NTS

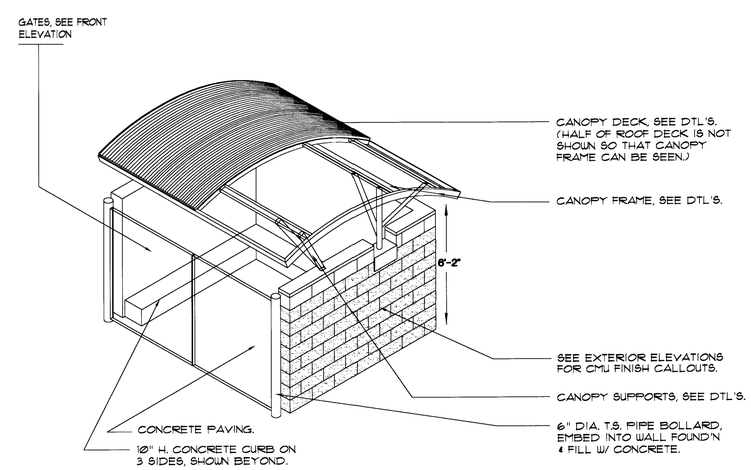

TRASH ENCLOSURE - AXONOMETRIC VIEW (A / C20)

NTS

REV	DESCRIPTION	BY	DATE	AGEN. APP.

PROJ NO: 2193.00
DESIGN: JL
PLOT DATE: 10/12/07
SCALE: AS SHOWN

PROFESSIONAL ENGINEER - STATE OF NEVADA
THOMAS D. MILLER
EXP. 12-31-07
CIVIL
NO. 15776
STAMP DATE: 10/12/07

MARTIN MARTIN CIVIL ENGINEERS & SURVEYORS
2101 S. JONES BLVD
SUITE 120
LAS VEGAS, NV 89146
PHONE (702) 248-8000
FAX (702) 248-8070

CITY OF LAS VEGAS
FIRE STATION NO. 48
TRASH ENCLOSURE DETAILS I

SHEET C-20
20 OF 26 SHTS
CLV DWG. NO. 630-104

24423

105720