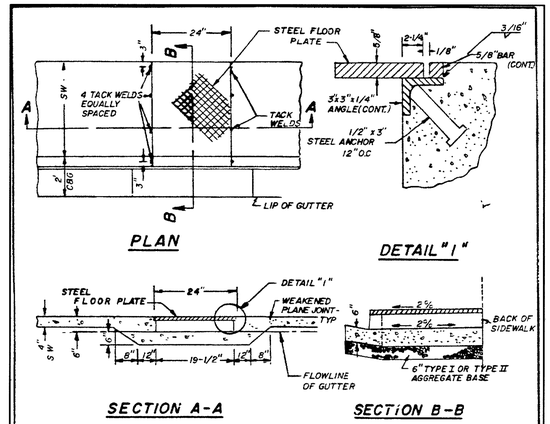

NOTES

1. IF WIDTH OF PLATE IS GREATER THAN 24", A SPECIAL DESIGN IS REQUIRED
2. ALL EXPOSED METAL PARTS SHALL BE GALVANIZED AND ALL GALVANIZING DAMAGED BY FABRICATION OR INSTALLATION SHALL RECEIVE TWO COATS OF ALUMINUM PAINT (GALVONOX OR EQUAL)

SPECIFICATION REFERENCE	UNIFORM STANDARD DRAWINGS CLARK COUNTY AREA
710 STRUCTURAL STEEL	SIDEWALK DRAIN
DATE	DWG NO 236 / PAGE NO 42

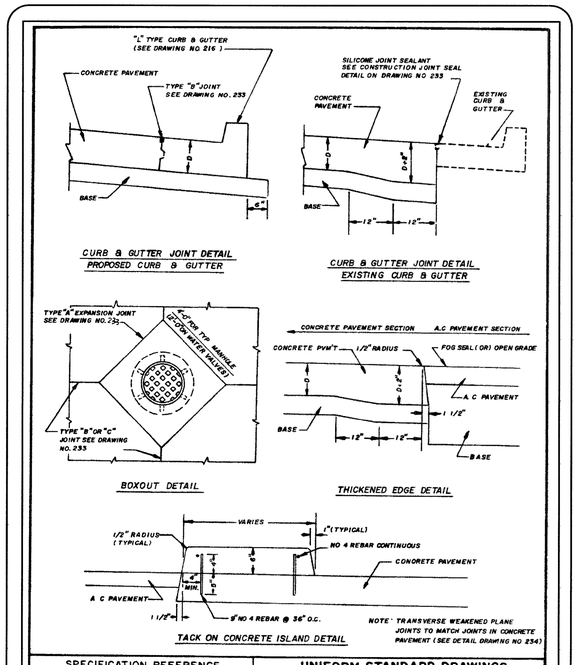

SPECIFICATION REFERENCE	UNIFORM STANDARD DRAWINGS CLARK COUNTY AREA
409 CONCRETE PAVEMENT	CONCRETE PAVEMENT CONSTRUCTION DETAILS
501 CONCRETE	
505 REINFORCING STEEL	
TT-S-00153A CLASS A SEALANT	
DATE	DWG NO 232 / PAGE NO 38

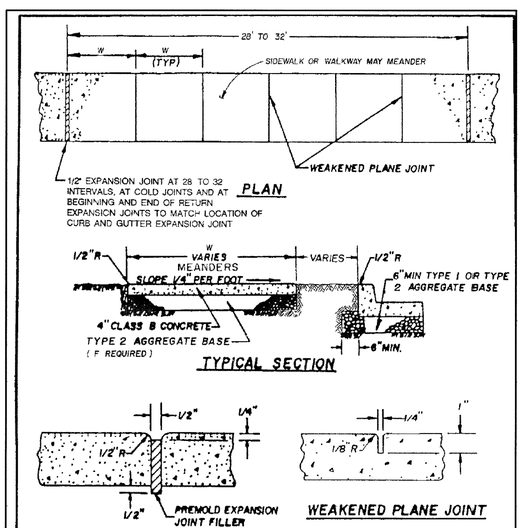

NOTES:

1. ON ALL CURB RETURNS A 1/2" EXPANSION JOINT SHALL BE CONSTRUCTED BETWEEN THE BACK OF CURB AND THE SIDEWALK OR WALKWAY FOR THE ENTIRE LENGTH OF THE RETURN.
2. LONGITUDINAL WEAKENED PLANE JOINT REQUIRED AT THE MIDPOINT OF SIDEWALK OR WALKWAY 10' OR WIDER.

REVISED	APPROVALS (INITIALS)		
	HHP	GCW	CLV
DATE	GMR	CWA	TA

RECOMMENDED BY: CRAIG A. PRIMAS R.P.E. # 6638 8/10/88

APPROVED BY: C.L.V. CITY ENGINEER R.P.E. #7569 10-12-88

SUMMERLIN STANDARD DRAWINGS

CONCRETE SIDEWALK OR WALKWAY

DATE 8-88 | DWG NO S-72 | PAGE NO 1 OF 1

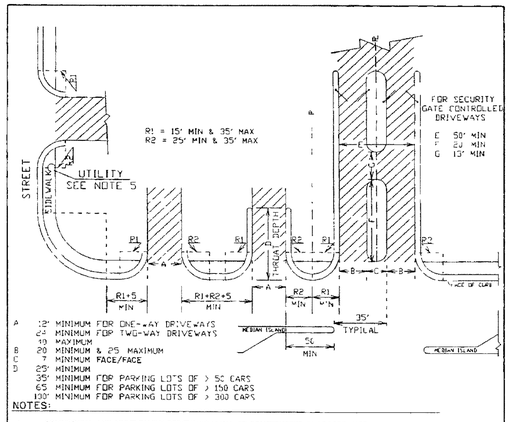

NOTES:

1. COMMERCIAL AND MULTI-FAMILY DRIVEWAYS SHALL BE CONSTRUCTED IN ACCORDANCE WITH STD. DWG. NO S-61
2. LOCAL ORDINANCES MAY APPLY AND SHALL HAVE PREFERENCE.
3. THE TOTAL WIDTH OF DRIVEWAY OPENINGS SHALL NOT EXCEED 65% OF FRONT FOOTAGE.
4. ONLY ONE DRIVEWAY SHALL BE ALLOWED OPPOSITE (+/-10 FEET) EACH OTHER AT A RAISED MERIDIAN OPENING. WHEN A PROPERTY LINE FALLS IN A MEDIAN OPENING A JOINT DRIVEWAY AGREEMENT SHALL BE REQUIRED OR NO DRIVEWAY WILL BE ALLOWED
5. NO DRIVEWAY SHALL BE LOCATED WITHIN 5 FEET OF A LIGHT POLE, FIRE HYDRANT, MAILBOX, ABOVE-GROUND ELECTRICAL TRANSFER BOX, OR BLOCK WALL HIGHER THAN 2 FEET.
6. GEOMETRICS APPLY TO NEW CONSTRUCTION ONLY, AND MAY VARY IN EXISTING DEVELOPMENTS SUBJECT TO APPROVAL OF THE TRAFFIC ENGINEER
7. ALL DRIVEWAY LOCATIONS SHALL BE SUBJECT TO REVIEW AND APPROVAL BY SDRC
8. REFERENCE STD. DWG NO S-61
9. SIDEWALKS MAY BE REQUIRED ADJACENT TO MAJOR ENTRANCES TO LARGER RESIDENTIAL COMPLEXES OR SHOPPING CENTERS

RECOMMENDED BY: CHRISTOPHER W ANDERSON R.P.E. # 5071

APPROVED BY: C.L.V. CITY ENGINEER R.P.E. NO 9160

SUMMERLIN STANDARD DRAWINGS

DRIVEWAY GEOMETRICS COMMERICAL & MULTI-FAMILY

DATE 2/2/93 | DWG. NO S-58A | PAGE NO. 1 OF 1

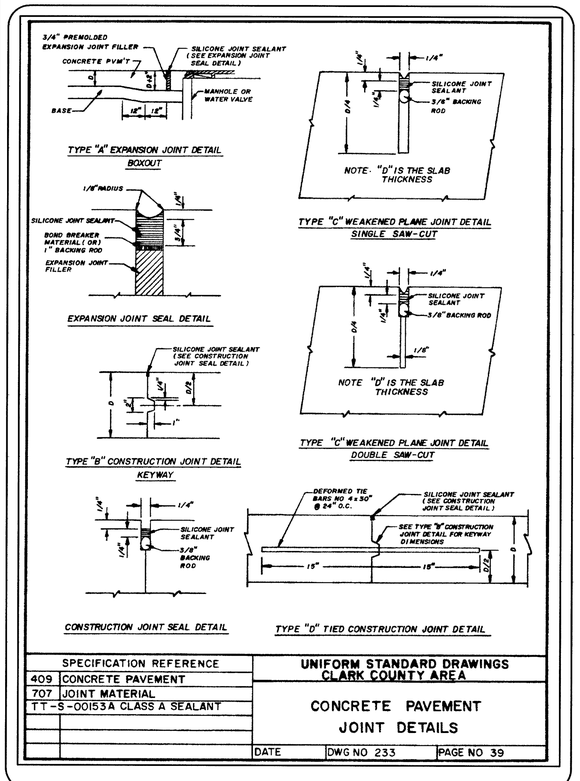

SPECIFICATION REFERENCE	UNIFORM STANDARD DRAWINGS CLARK COUNTY AREA
409 CONCRETE PAVEMENT	CONCRETE PAVEMENT JOINT DETAILS
707 JOINT MATERIAL	
TT-S-00153A CLASS A SEALANT	
DATE	DWG NO 233 / PAGE NO 39

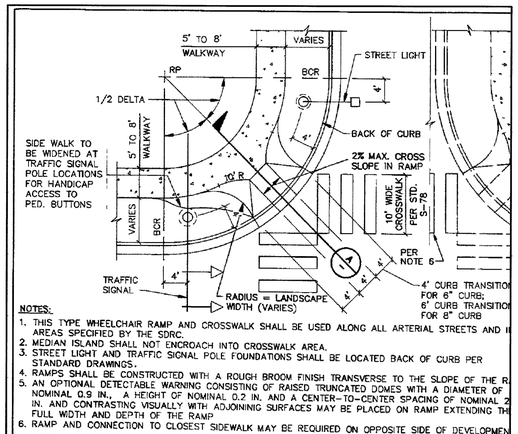

NOTES:

1. THIS TYPE WHEELCHAIR RAMP AND CROSSWALK SHALL BE USED ALONG ALL ARTERIAL STREETS AND I AREAS SPECIFIED BY THE SDRC.
2. MEDIAN ISLAND SHALL NOT ENCROACH INTO CROSSWALK AREA.
3. STREET LIGHT AND TRAFFIC SIGNAL POLE FOUNDATIONS SHALL BE LOCATED BACK OF CURB PER STANDARD DRAWINGS.
4. RAMPS SHALL BE CONSTRUCTED WITH A ROUGH BROOM FINISH TRANSVERSE TO THE SLOPE OF THE R
5. AN OPTIONAL DETECTABLE WARNING CONSISTING OF RAISED TRUNCATED DOMES WITH A DIAMETER OF NOMINAL 0.9 IN., A HEIGHT OF NOMINAL 0.2 IN. AND A CENTER-TO-CENTER SPACING OF NOMINAL 2 IN. AND CONTRASTING VISUALLY WITH ADJOINING SURFACES MAY BE PLACED ON RAMP EXTENDING TH FULL WIDTH AND DEPTH OF THE RAMP
6. RAMP AND CONNECTION TO CLOSEST SIDEWALK MAY BE REQUIRED ON OPPOSITE SIDE OF DEVELOPMEN

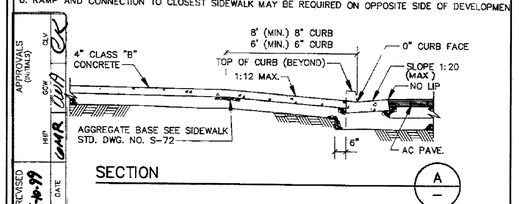

APPROVALS (INITIALS)	HHP	GCW	CLV
REVISED 6-4-99	GMR	CWA	

RECOMMENDED BY: CHRISTOPHER W. ANDERSON R.P.E. NO. 5071

APPROVED BY: C.L.V. CITY ENGINEER R.P.E. NO. 9160

SUMMERLIN STANDARD DRAWING

SIDEWALK RAMP (WALKWAY DETACHED FROM CURB OPTION 1

DATE 12/06/93 | DWG. NO. S-75 | PAGE NO. 1 OF

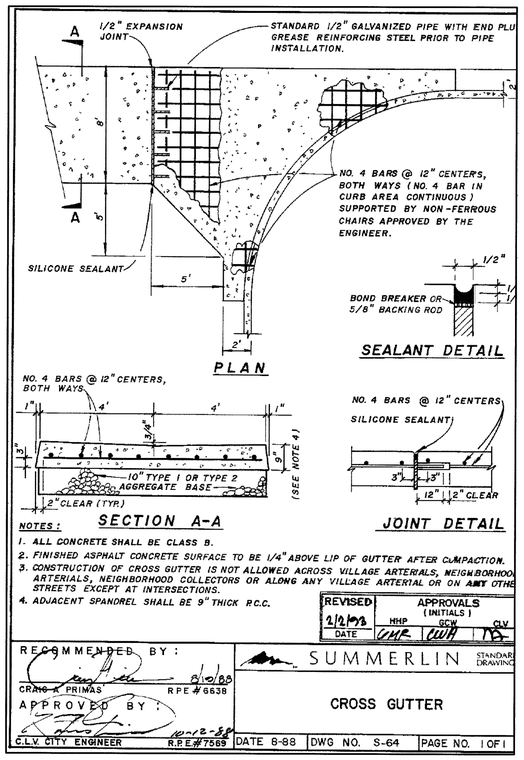

NOTES:

1. ALL CONCRETE SHALL BE CLASS B.
2. FINISHED ASPHALT CONCRETE SURFACE TO BE 1/4" ABOVE LIP OF GUTTER AFTER COMPACTION.
3. CONSTRUCTION OF CROSS GUTTER IS NOT ALLOWED ACROSS VILLAGE ARTERIALS, NEIGHBORHOO ARTERIALS, NEIGHBORHOOD COLLECTORS OR ALONG ANY VILLAGE ARTERIAL OR ON ANY OTHE STREETS EXCEPT AT INTERSECTIONS.
4. ADJACENT SPANDREL SHALL BE 9" THICK P.C.C.

REVISED	APPROVALS (INITIALS)		
	HHP	GCW	CLV
DATE	GMR	CWA	TA

RECOMMENDED BY: CRAIG A. PRIMAS R.P.E. # 6638 8/10/88

APPROVED BY: C.L.V. CITY ENGINEER R.P.E. #7569 10-12-88

SUMMERLIN STANDARD DRAWING

CROSS GUTTER

DATE 8-88 | DWG NO. S-64 | PAGE NO. 1 OF 1

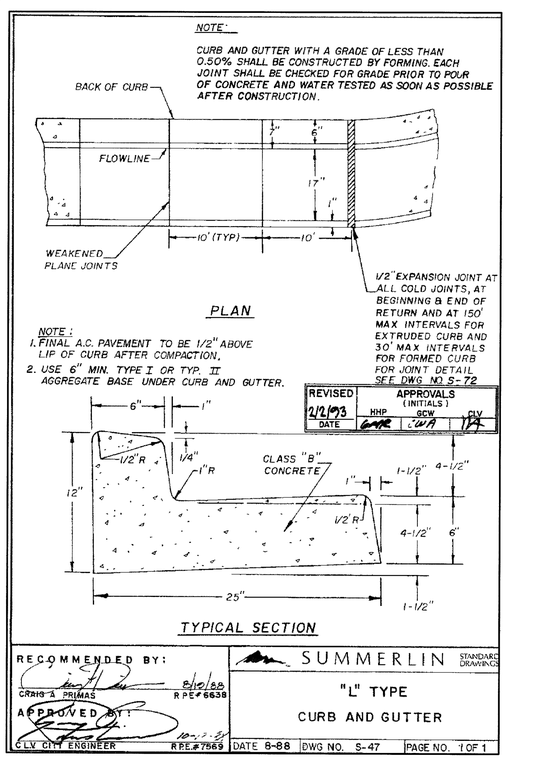

REVISED	APPROVALS (INITIALS)		
	HHP	GCW	CLV
DATE	GMR	CWA	TA

RECOMMENDED BY: CRAIG A. PRIMAS R.P.E. # 6638 8/10/88

APPROVED BY: C.L.V. CITY ENGINEER R.P.E. #7569 10-12-88

SUMMERLIN STANDARD DRAWINGS

"L" TYPE CURB AND GUTTER

DATE 8-88 | DWG. NO. S-47 | PAGE NO. 1 OF 1

REV	DESCRIPTION	BY	DATE / AGEN. APP.

PROJ NO: 602.002
DESIGN: LG
PLOT DATE: 11/01/05
SCALE: AS SHOWN

REGISTERED PROFESSIONAL ENGINEER — STATE OF NEVADA — PETER J. LAAS — Exp: 12/31/07 — CIVIL — No. 14444

STAMP DATE: 1/12/06

TRC
Customer-Focused Solutions
BV Engineering Nevada
8395 W. SUNSET ROAD
Suite 190
Las Vegas, NV 89113
Tel: 702-650-6572
Fax: 702-307-9222
Web: trcsolutions.com

THE HOWARD HUGHES CORPORATION
FIRE STATION NO. 47
CONSTRUCTION DETAILS V

SHEET C-13
13 OF 21 SHTS
CLV DWG NO. 630-102

G:\602.002\FS 47 Reste\dwg\Imp Plans\fs47_13.dwg dentonscad Wed, 11 Jan 2006 - 3:36pm

88160