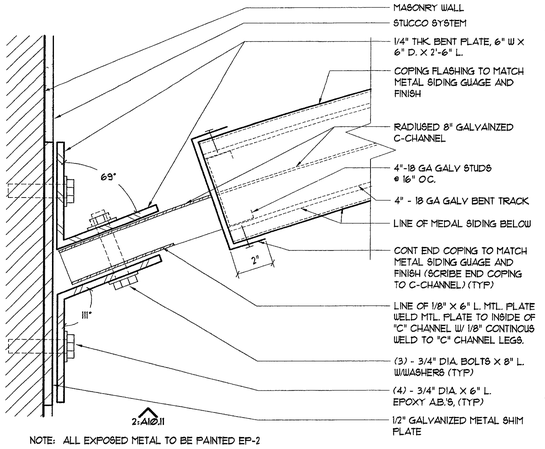


NOTE: ALL EXPOSED METAL TO BE PAINTED EP-2

## 1 Canopy Connection Detail

Scale: 3" = 1'-0"

A10-11-1

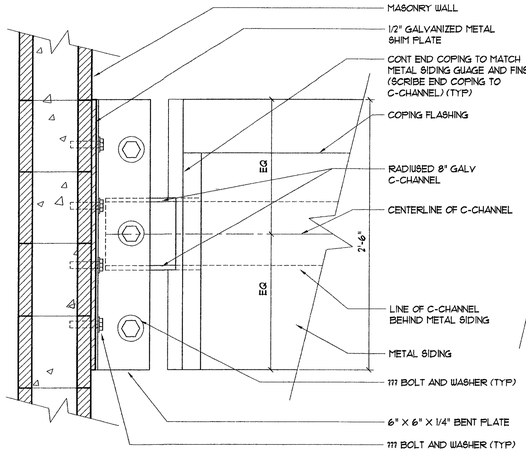


## 2 Canopy Connection Detail

Scale: 1-1/2" = 1'-0"

A10-11-2

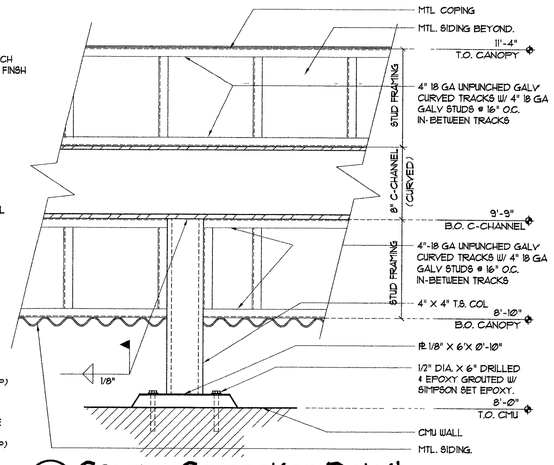


## 3 Canopy Connection Detail

Scale: 1-1/2" = 1'-0"

A10-11-3

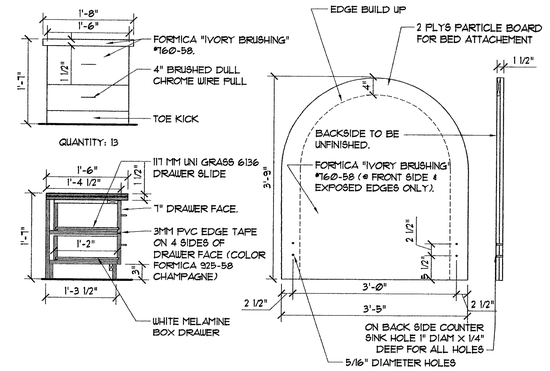


NOTE: MANUFACTURERS FOR REFERENCE ONLY - SEE SPECS

## 4 Nightstand/Headboard Details

Scale: 3/4" = 1'-0"

A10-11-4

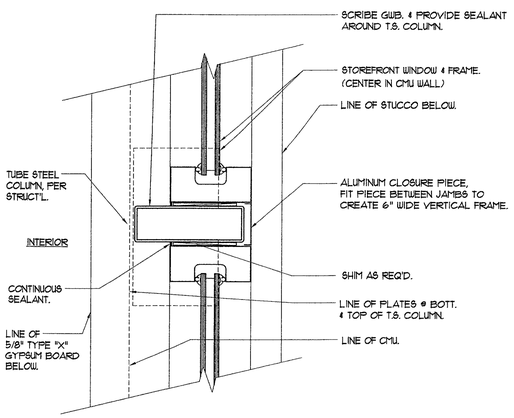


NOTE:
PROVIDE ANCHORS PER MFR. SPECS

## 5 Vertical Mullion Detail @ T.S. Col.

Scale: 3"=1'-0"

A10.11-5

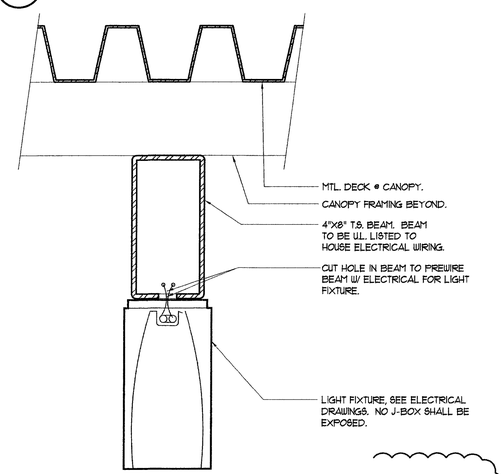


## 6 Lighting Detail @ T.S. Beam

Scale: 3" = 1'-0"

A10-11-1

RECEIVED
JUN 25 2004
CITY OF LAS VEGAS PERMITS

PLANS APPROVED
ARCHITECTURAL
Building & Safety Dept
City of Las Vegas Nevada

MJH JUN 28 2004

Does Not Cover Structural, Electrical, Plumbing Systems or Civil Site Improvements Make No Changes Without Approval Plan Is Not a Permit to Violate Any Ordinance

93289

CITY OF LAS VEGAS
NEVADA

REVISIONS
1 PER OWNER - 6/21/04

CONSULTANT

DEPARTMENT OF PUBLIC WORKS

CITY OF LAS VEGAS, NEVADA
FIRE STATION #8

Details

STAMP
SAMUEL D. TOLMAN
REGISTERED
No. 2272
ARCHITECT

OWNER: CITY OF LAS VEGAS
DEPARTMENT OF PUBLIC WORKS
ARCHITECTURAL SERVICES

ARCHITECT OF RECORD
SAMUEL D. TOLMAN, AIA, NCARB.
400 EAST STEWART AVENUE
LAS VEGAS, NEVADA 89101
PHONE: (702) 229-6535
FAX: (702) 382-3232
TDD: (702) 386-9108

| | |
|---|---|
| DRAWN | EPS |
| FILE | fs8-A10.11 |
| DATE | 4/1/04 |
| SCALE | As Noted |
| BID NO | 04.15341.04 |
| CLV DWG NO | 630-101 |
| SHT NO | A10.11 |

DRAWINGS AS INSTRUMENTS OF SERVICE ARE THE PROPERTY OF THE ARCHITECT PROFESSIONAL WHOSE STAMP OF CERTIFICATION APPEARS ON THE DRAWINGS AND SPECIFICATIONS. ANY USE OR REPRODUCTION IN WHOLE OR IN PART WITHOUT WRITTEN CONSENT IS STRICTLY PROHIBITED COPIES OF THE DRAWINGS AND SPECIFICATIONS ISSUED BY THE CLIENT MAY BE UTILIZED ONLY FOR OCCUPYING THE PROJECT FOR WHICH THEY WERE PREPARED AND NOT FOR THE CONSTRUCTION OF ANY OTHER PROJECT. N.A.C. 623.780