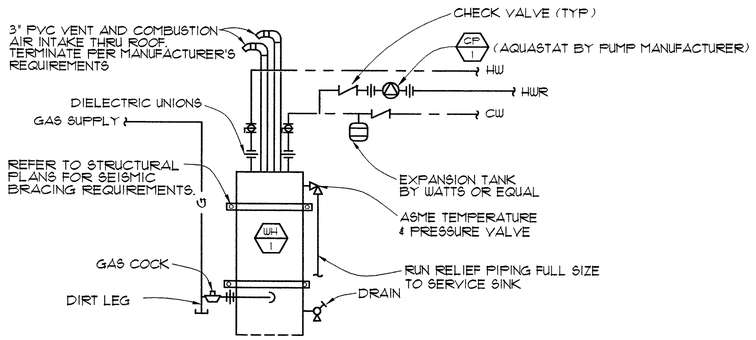

WATER HEATER DETAIL (1/P2)

NO SCALE

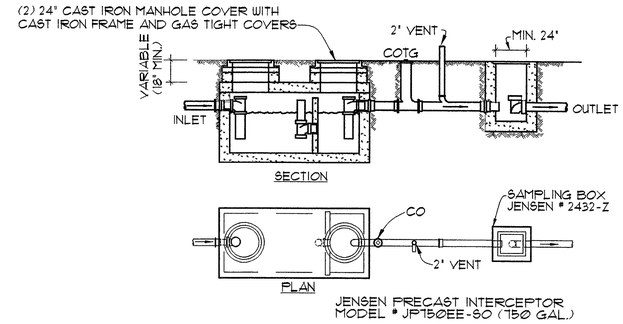

NOTE:
1. COORDINATE INLET AND OUTLET INVER ELEVATIONS WITH CIVIL.
2. UNIT TO BE DESIGNED FOR FULL TRAFFIC LOAD.

SAND/OIL INTERCEPTOR DETAIL (2/P2)

NO SCALE

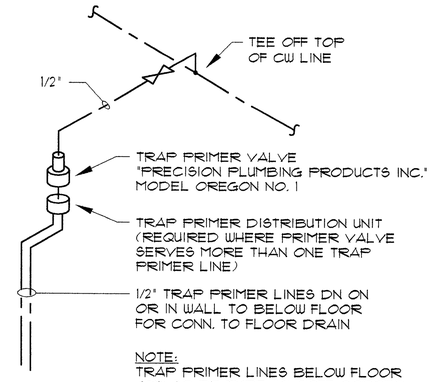

NOTE:
TRAP PRIMER LINES BELOW FLOOR ARE TO BE TYPE "K" SOFT COPPER CONTINUOUS LENGTH WITH NO JOINTS BELOW FLOOR.

TRAP PRIMER DETAIL (3/P2)

NO SCALE

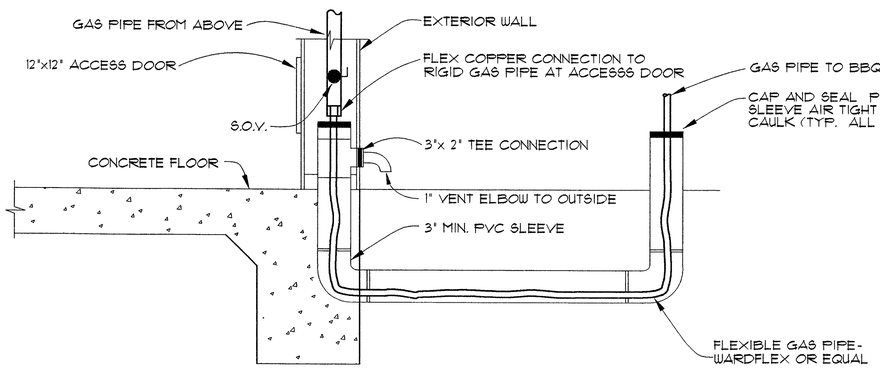

GAS PIPING DETAIL (4/P2)

NOT TO SCALE

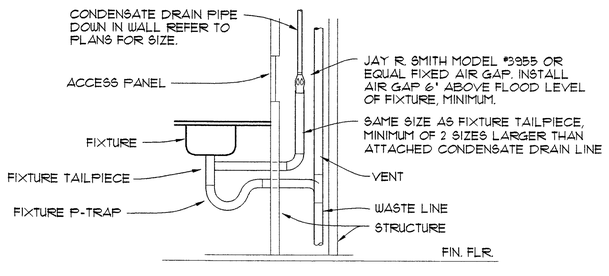

CONDENSATE DRAIN TAILPIECE CONNECTION DETAIL (5/P2)

NOT TO SCALE

PLUMBING EQUIPMENT SCHEDULE

MARK	FIXTURE	MANUFACTURER/ MODEL	REMARKS
ICE	ICE MACHINE	MANITOWOC MODEL NO. QD0282A	SELF-CONTAINED AIR COOLED WITH S-400 ICE BIN, 120 VOLT/1 PHASE/12.6 MCA.
RO	REVERSE OSMOSIS UNIT	CULLIGAN MODEL NO. AC-30	
GD	GARBAGE DISPOSER	IN-SINK-ERATOR MODEL NO. SS-75	120 VOLT/ 1 PHASE/ ¾ HP.
WF-1	WATER FILTER	EVERPURE MODEL NO. EV9324-01 & K10 FILTER WITH EC110 CARTRIDGE	PROVIDE PRE-FILTER IN TRANSPARENT BOWL AND FINAL FILTER ASSEMBLY WITH FILTER.
WF-2	WATER FILTER	EVERPURE MODEL NO. EV9324-01	PROVIDE FINAL FILTER ASSEMBLY WITH FILTER.
UB	UTILITY BOX	SPECIALITY PRODUCTS MODEL NO. OB-503	PROVIDE ½" BALL VALVE AND WATER HAMMER ARRESTOR.
HR	HOSE REEL	REELCRAFT MODEL NO. 7850 OLP	PROVIDE 50 FEET OF 300 PSI HOSE, 3 DYNAQUIP 6MP31 QUICK DISCONNECTS, 3 DYNAQUIP 6MP37 AIR COUPLERS, 1 GRAINGER 3JA23 TIRE INFLATOR, 2 GRAINGER 3JA29 TIRE INFLATORS AND 3 GRAINGER 6W181 BLOW GUNS

AIR COMPRESSOR SCHEDULE

MARK	MANUFACTURER/ MODEL	REMARKS
AC	CHAMPION VR5-8	TWO STAGE ELECTRIC WITH MOUNTED MAG STARTER, VIBRO ISOLATORS, AUTOMATIC TANK DRAIN, LOW LEVEL OIL SWITCH, AIR COOLED AFTER COOLER, MODEL CRN-15 REFRIGERATED AIR DRYER, 80 GAL. VERTICAL TANK(16.5 CFM AT 175 PSIG, 208V/3Ø/5 HP

WATER HEATER SCHEDULE

SYMBOL	MANUFACTURER/ MODEL NUMBER	MINIMUM STORAGE (GALLONS)	MINIMUM RECOVERY (GPH AT 100°F RISE)	TYPE OF GAS	GAS INPUT (MBTUH)	REMARKS
WH 1	BRADFORD WHITE EF-100T-199E-3N(A)	100	238	NATURAL	199.999	PROVIDE 3"ø INTAKE & EXHAUST PVC PIPES & TERMINATION CAPS

CIRCULATING PUMP

MARK / NUMBER

SYMBOL	MANUFACTURER/ MODEL NUMBER	GPM	HEAD (FT. WC)	ELECTRICAL VOLTAGE	ELECTRICAL PHASE	ELECTRICAL HP	REMARKS
CP 1	GRUNDFOS UP15-42SF	5	11	120	1	1/25	PROVIDE GRUNDFOS UP AQUASTAT

NOTE: NO SUBSTITUTIONS FOR CIRCULATING PUMP

GENERAL NOTES

1. MANUFACTURERS ARE FOR REFERENCE ONLY. SEE SPECIFICATIONS.

83322

1 MCLTDC03\vatec Engineering\Fire Station #8\Plumbing\P2.dwg, A8\8/2004 12:02:29 PM, Dane

CITY OF LAS VEGAS NEVADA

REVISIONS

CONSULTANT

COMFORT ENGINEERING
MECHANICAL • ELECTRICAL • PLUMBING
2550 SOUTH RAINBOW, SUITE E-28
LAS VEGAS, NEVADA 89146
TEL. (702) 367-6892 • FAX 367-1076
COMFORT DESIGN

DEPARTMENT OF PUBLIC WORKS

CITY OF LAS VEGAS, NEVADA
FIRE STATION #8

PLUMBING SCHEDULES AND DETAILS

STAMP

RONALD G. MARIANO
Expires 12-31-05
MECHANICAL
No. 14750
STATE OF NEVADA
PROFESSIONAL ENGINEER
4/9/04

OWNER: CITY OF LAS VEGAS
DEPARTMENT OF PUBLIC WORKS
ARCHITECTURAL SERVICES

400 EAST STEWART AVENUE
LAS VEGAS, NEVADA 89101
PHONE: (702) 229-6535
FAX: (702) 382-3232
TDD: (702) 386-9108

DRAWN: DBB
FILE:
DATE: 4/9/04
SCALE: AS NOTED
SID NO: 04.15341.04
CLV DWG NO: 630-101
SHT NO: P2

DRAWINGS AS INSTRUMENTS OF SERVICE ARE THE PROPERTY OF THE DESIGN PROFESSIONAL. PHOTO STAMP OF CERTIFICATION APPEARS ON THE DRAWINGS AND SPECIFICATIONS ANY USE OR REPRODUCTION IN WHOLE OR IN PART WITHOUT WRITTEN CONSENT IS STRICTLY PROHIBITED COPIES OF THE DRAWINGS AND SPECIFICATIONS REMAINS BY THE CLIENT MAY BE UTILIZED ONLY FOR OCCUPYING THE PROJECT FOR WHICH THEY WERE PREPARED AND NOT FOR THE CONSTRUCTION OF ANY OTHER PROJECT N.A.C. 623.700