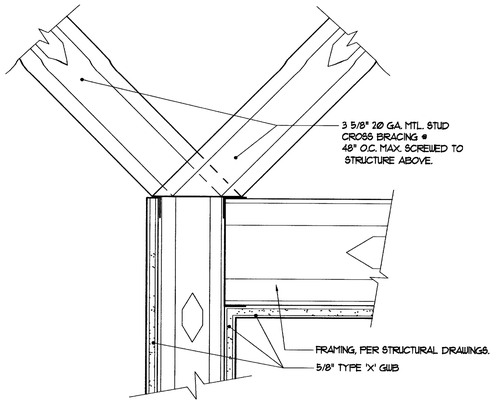

NOTES:
- REFERENCE EXISTING CONDITIONS FOR ELEVATIONS OF GWB CEILING.

1 Gyp. Bd. Clg. @ Partition
Scale: 3"=1'-0" 09500-11 A10-5-1

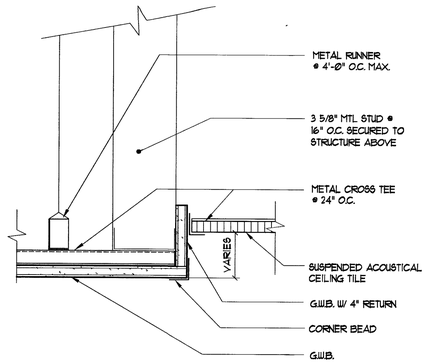

2 G.W.B. Ceiling @ A.C.T. Interface
Scale: 3"=1'-0" 09500-06 A10-5-2

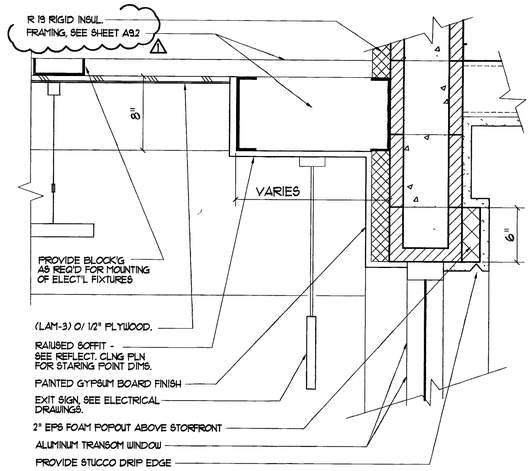

3 Ceiling Detail @ Entry
Scale: 1 1/2"=1'-0" A10-5-3

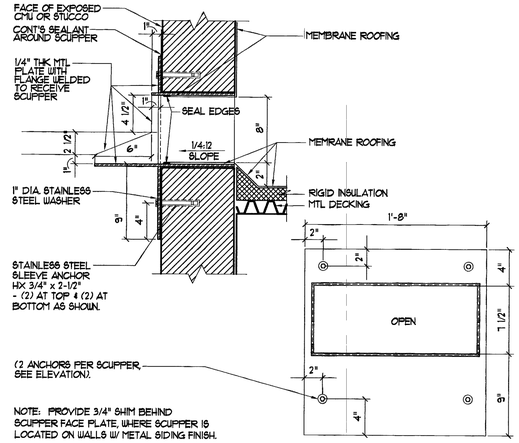

4 Overflow Scupper Dtl.
Scale: 1-1/2" = 1'-0" A10-5-4newest

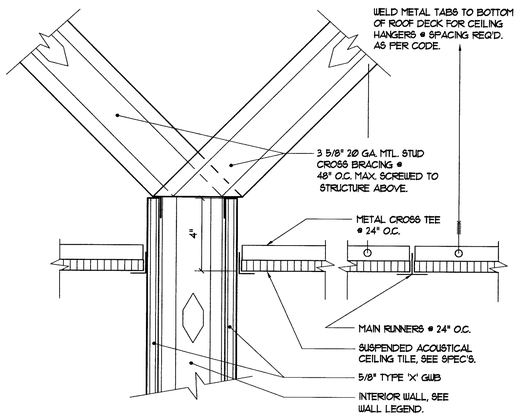

5 A.C.T. Interface W/ Partition
Scale: 3"=1'-0" 09500-11 A10-5-5

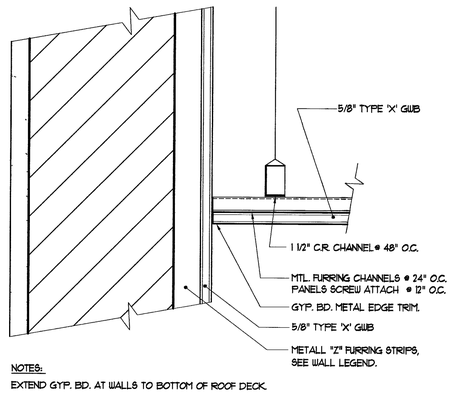

NOTES:
EXTEND GYP. BD. AT WALLS TO BOTTOM OF ROOF DECK.

6 Gyp. Bd. Clg. Transition @ CMU Wall
Scale: 3"=1'-0" 09500-14 A10-5-6

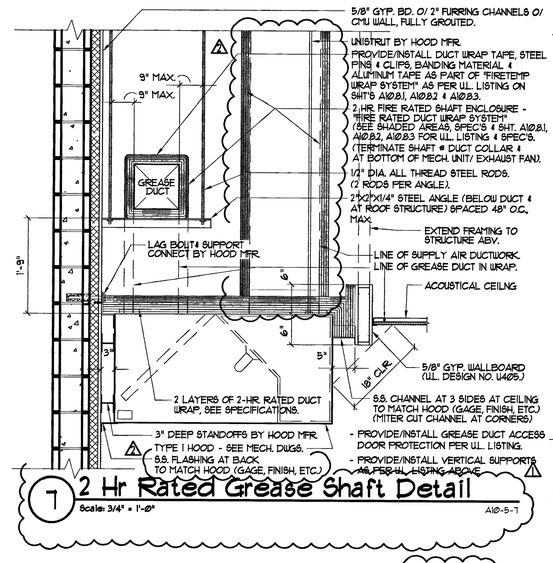

7 2 Hr Rated Grease Shaft Detail
Scale: 3/4" = 1'-0" A10-5-7

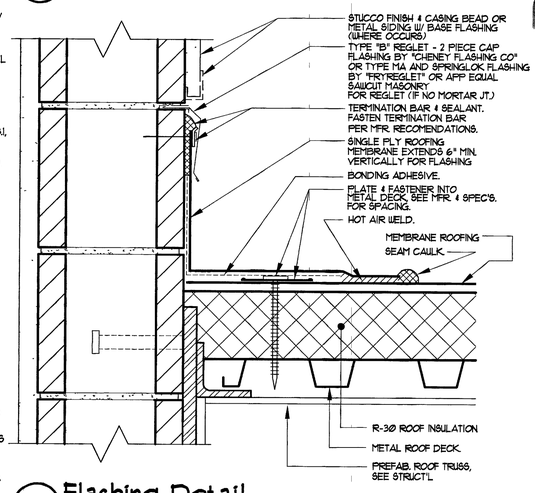

8 Flashing Detail
Scale: 3"=1'-0" A10-5-8

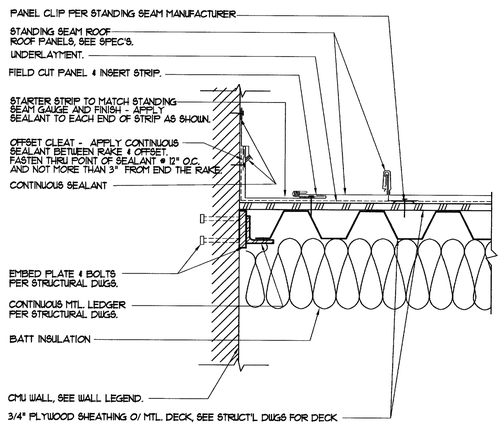

9 Sidewall Detail @ S.S. Roof
Scale: 1 1/2"=1'-0" A10-5-9

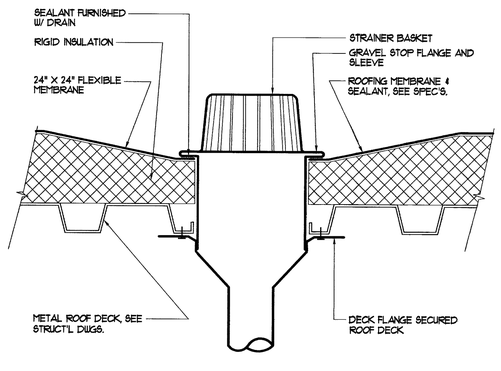

NOTE:
SEE DTL. 4/A10.5 FOR OVERFLOW SCUPPER.

10 Roof Drain
Scale: 3"=1'-0" 07110-04 A10-5-10

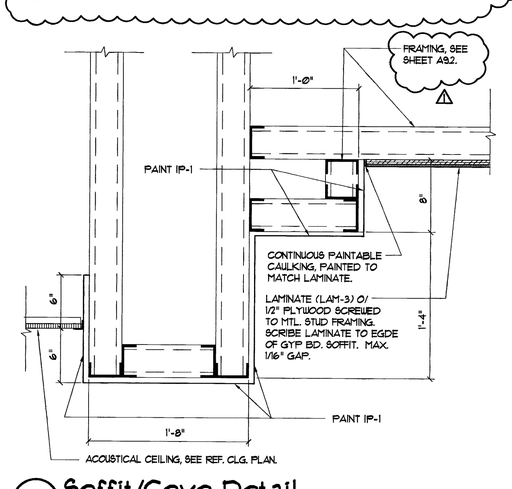

11 Soffit/Cove Detail
Scale: 1 1/2"=1'-0" A10-5-11

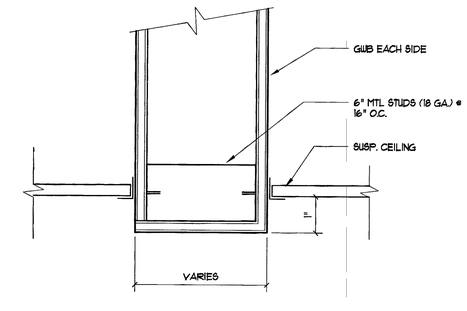

12 A.C.T. Ceiling @ Soffit
Scale: 3"=1'-0" 09500-03 A10-5-12

RECORD DRAWING

PUBLIC WORKS

DEPARTMENT OF

CITY OF LAS VEGAS, NEVADA
FIRE STATION #8

Details

REVISIONS
1 BLDG DEPT - 5/21/04
2 BLDG DEPT - 6/21/04

CONSULTANT

STAMP

OWNER: CITY OF LAS VEGAS
DEPARTMENT OF PUBLIC WORKS
ARCHITECTURAL SERVICES

ARCHITECT OF RECORD
SAMUEL D. TOLMAN, AIA, NCARB
400 EAST STEWART AVENUE
LAS VEGAS, NEVADA 89101
PHONE: (702) 229-6535
FAX: (702) 382-3232
TDD: (702) 386-9108

DRAWN	EPS
FILE	fs8-A10-5
DATE	4/1/04
SCALE	As Noted
BID NO	04.1534.04
CLV DWG NO	630-101
SHT NO	059 A10.5

DRAWINGS AS INSTRUMENTS OF SERVICE ARE THE PROPERTY OF THE DESIGN PROFESSIONAL. PHOTO STAMP OF CERTIFICATION, APPEARS ON THE DRAWINGS AND SPECIFICATIONS ARE USE OR REPRODUCTION IN WHOLE OR IN PART WITHOUT WRITTEN CONSENT IS STRICTLY PROHIBITED COPIES OF THE DRAWINGS AND SPECIFICATIONS RETAINED BY THE CLIENT MAY BE UTILIZED ONLY FOR OCCUPYING THE PROJECT FOR WHICH THEY WERE PREPARED AND NOT FOR THE CONSTRUCTION OF ANY OTHER PROJECT N.A.C. 623.793

/01B4X1