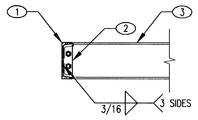

KEYNOTES:

1. PERIMETER CHANNEL PER CANOPY FRAMING PLAN
2. 3/8" TAB W/ (2) 3/4"ø THROUGH BOLTS
3 EXTEND STEEL LEDGER OUT TO CANOPY PERIMETER CHANNEL

NOTES:

A ADJOINING CANOPY FRAMING NOT SHOWN FOR CLARITY PROVIDE CANOPY INFILL STUDS AS REQ'D

51 STEEL CHANNEL AT STEEL CHANNEL
NO SCALE

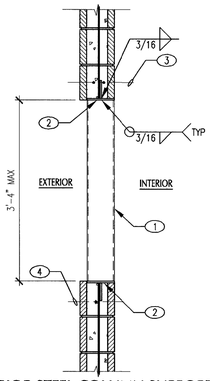

KEYNOTES:

1. TS 6x2x1/4 FLUSH W/ INSIDE FACE OF WALL
2. 3/8"x6"x8" BEARING PLATE W/ 3/8"x4"x8" STIFFENER PLATE. W/ (2) #4 x 1'-6" LONG D.B.A. AT 6" O.C

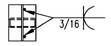

BEARING PLATE SHALL BE RECESSED INTO MASONRY AS SHOWN

3. LINTEL REINFORCING PER PLAN AND/OR SCHEDULE
4 PROVIDE MIN #5 AT BOTTOM OF OPENING

NOTES:

A. TYPICAL WALL REINFORCING NOT SHOWN FOR CLARITY

48 INTERIOR STEEL COLUMN SUPPORT AT MASONRY WALL AND LINTEL
NO SCALE

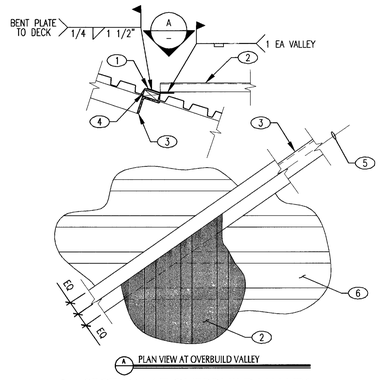

KEYNOTES:

1 3/16"x6"xCONT BENT PLATE AT VALLEY OVERBUILD
2. OVERBUILD STEEL ROOF DECKING PER PLAN
3 ANGLE PER PLAN ALIGNED W/ OVERBUILD VALLEY
4 2x BLOCKING AT EA RIB ALONG ANGLE
5. CENTER LINE OF BENT PLATE AND ANGLE
6 LOWER STEEL ROOF DECK PER PLAN

44 SECTION AT OVERBUILD VALLEY
NO SCALE

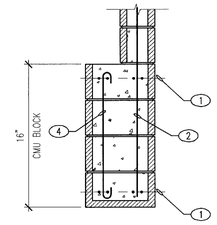

KEYNOTES:

1 TYP LINTEL REINFORCING T&B PER PLAN AND/OR SCHEDULE
2 TYP WALL REINFORCING PER PLAN
3 NOT USED
4 #5 AT 24" O.C BARS W/ 180° HOOKS T&B

NOTES:

A. A SINGLE 1" MAX DIA CONDUIT ALLOWED IN EACH CELL WITHOUT REINFORCING

40 DOUBLE-WYTHE MASONRY LINTEL
NO SCALE

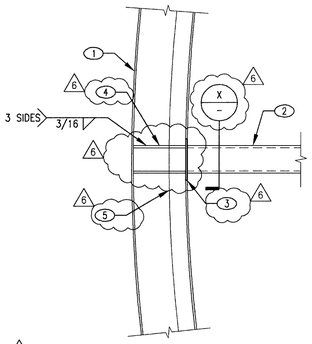

KEYNOTES:

1 RADIUSED W12x26
2. HSS PER PARTIAL OVERBUILD FRAMING PLAN
3 3/8"x6"x0'-8" TALL PLATE BUTT WELDED TO W12 FLANGE EDGE
4 1/4" WEB STIFFENERS
5. EDGE OF ARCH'L WALL

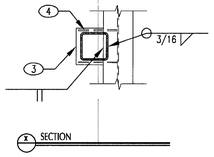

52 HSS AT RADIUSED WF
NO SCALE

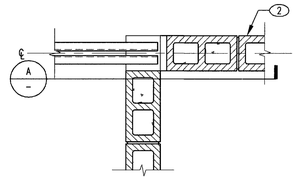

KEYNOTES:

1. STEEL JOIST PER PLAN
2 3/4"x7 1/2" SQ BEARING PLATE W/ (1) 3/4"ø x6" HEADED STUD

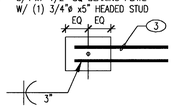

3. (2) #5x4'-0" LONG DRAG BARS SPACED 3" APART
4. 1 1/2" NON-SHRINK GROUT

48 INTERIOR STEEL COLUMN SUPPORT AT MASONRY WALL AND LINTEL
NO SCALE

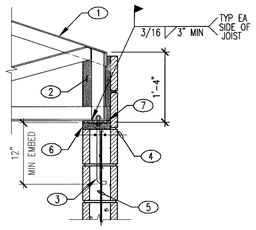

KEYNOTES.

1 ROOF JOIST PER PLAN
2. GROUT POCKET SOLID AFTER PLACING STEEL JOIST
3. (2) 3/4"ø ANCHOR BOLTS AT 8" O.C. (DOUBLE NUTS FOR LEVELING)
4 HORIZ REINFORCING AT ROOF LINE PER GSN
5. REINFORCING PER PLAN
6. 1 1/2" NON-SHRINK GROUT
7. 3/4"x6"x12" BEARING PLATE

45 PITCHED ROOF JOIST AT MASONRY BEARING WALL
NO SCALE

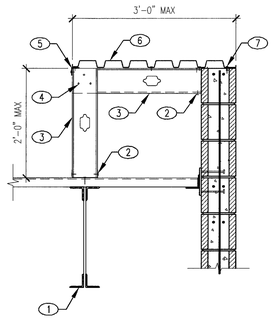

KEYNOTES:

1 STEEL JOIST PER PLAN ALIGNED W/ WALL ABOVE
2 600T137-43 STEEL TRACK W/ 1/4"ø TITEN SCREW ANCHORS AT 12" O.C PROVIDE 1" MIN PENETRATION IN MASONRY PROVIDE #10 SCREWS THROUGH FLANGE TO EA STUD MEMBER. AT STEEL DECK, ANCHOR W/ #10 SCREWS AT 12" O.C INTO FLUTES
3 600S162-43 STEEL STUDS AT 24" O.C.
4 (3) #10 SCREWS
5. CONT 2"x2"x43 MIL EDGE ANGLE. W/ #10 SCREWS AT EA STUD.
6 STEEL ROOF DECK PER PLAN FASTEN W/ #10 SCREWS AT 24" O.C. AT PARALLEL SUPPORTS AND AT 12" O.C AT PERPENDICULAR SUPPORTS
7. PROVIDE TITEN SCREW ANCHORS THROUGH DECK INTO TOP OF WALL AT 24" O.C 2 1/2" MIN EDGE DIST

NOTES:

A. FOR ADDITIONAL INFO SHOWN BUT NOT NOTED SEE DETAIL 3/S4.1

41 GABLE END PARAPET FRAMING AT MASONRY WALL
NO SCALE

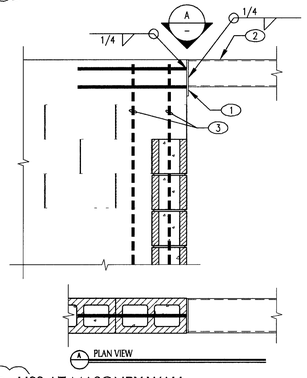

KEYNOTES:

1 3/8"x7 1/2"x8" TALL PLATE W/ (2) #5x2'-0" LONG DEFORMED BAR ANCHOR AT 6" O.C
2. HSS PER PARTIAL ROOF OVERBUILD PLAN CENTER ON WALL AT GRID 18.
3. WALL JAMB PER FOUNDATION PLAN EXTEND BARS TO TOP OF WALL

NOTES:

A. HSS BEAM ATTACHMENT MAY BE OFFSET FROM CENTER LINE OF EMBED PLATE PROVIDED THAT ALIGNMENT IS SUCH THAT IT WILL ACCOMODATE THE FILLET WELD ATTACHMENT CALLED FOR

A PLAN VIEW

53 HSS AT MASONRY WALL
NO SCALE

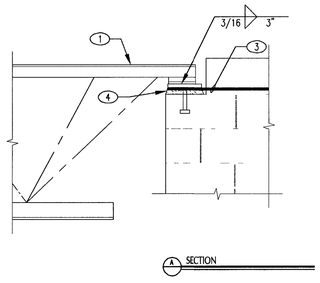

49 PLAN VIEW STEEL DRAG JOIST AT WALL CORNER
NO SCALE

KEYNOTES:

1. MASONRY WALL OR LINTEL WHERE OCCURS
2. (2) #5 x6'-0" LONG DRAG BARS
3. BEARING PLATE PER DETAIL 45/S4 4

NOTES:

A FOR ADDITIONAL INFO SHOWN BUT NOT NOTED SEE DETAIL 45/S4.4

46 PITCHED ROOF JOIST WITH DRAG AT MASONRY SHEAR WALL
NO SCALE

KEYNOTES:

1 ANGLE PER PLAN
2 STEEL ROOF DECK PER PLAN
3 2x BLOCKING AT EA FLUTE
4 600S162-43 STEEL STUDS AT 24" O.C. SANDWICHED BETWEEN JOISTS W/ BENT FLANGE
5 STEEL TRACK W/ #10 SCREWS AT 12" O.C.
6 (4) #10 SCREWS AT WEB JOINT
7 3/16"x6"xCONT BENT PLATE
8 #10 SCREWS TYP

42 OVERBUILD FRAMING AT RIDGE
NO SCALE

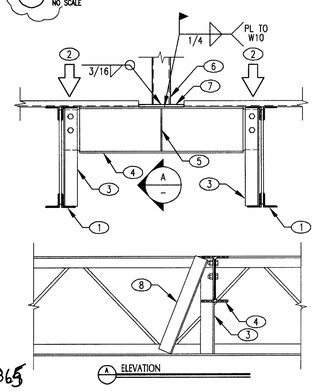

KEYNOTES:

1 STEEL JOIST PER PLAN
2 JOIST MFR SHALL DESIGN JOIST FOR POINT LOAD AS INDICATED ON PLAN
3. SHOP INSTALLED L3x3x1/4 VERTICAL WEB MEMBER AT WIDE FALNGE BEAM
4 W10x22 ALIGNED UNDER COLUMN W/ (2) 3/4"ø THRU BOLTS EACH END
5 1/4" WEB STIFFENER
6. STEEL COLUMN PER TRELLIS FRAMING PLAN
7 1/2"x10"x0'-10" PLATE
8 FIELD INSTALLED WEB MEMBER TO PANEL POINT AS NEEDE PER TYPICAL DETAIL SEE SHEET S0 3

102865

54 TRELLIS COLUMN BETWEEN STEEL JOISTS
NO SCALE

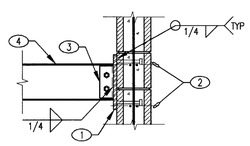

KEYNOTES:

1 3/4"x6"x1'-0" EMBED PLATE AT 4'-0" O C W/ (4) 3/4"ø x 5" HEADED STUDS

2. HORIZ CHORD REINFORCING AT ROOF LINE PER GSN
3 1/4" SHEAR TAB W/ (2) 3/4"ø THROUGH BOLTS
4 W8 BEAM PER PLAN AND/OR SECTION

NOTES:

A STEEL DECK AND LEDGER NOT SHOWN FOR CLARITY

50 W8 AT CMU WALL
NO SCALE

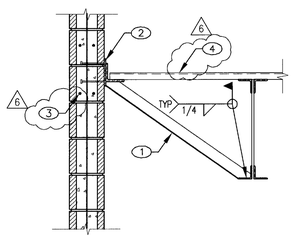

KEYNOTES:

1 L2 1/2 x 2 1/2 x 3/16 ANGLE BRACES AT 4'-0" O C MAX
2. EMBEDED PLATE PER 39/S4.3
3. HORIZ REINFORCING AT ROOF LINE PER GSN
4. ATTACH DECK TO SUPPORT PER GSN

47 STEEL DECK AT MASONRY WALL
NO SCALE

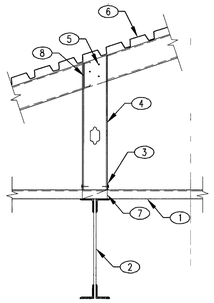

KEYNOTES:

1 STEEL ROOF DECK PER PLAN
2 STEEL JOIST ALIGNED BELOW BEARING STUD
3 STEEL TRACK W/ #10 SCREWS AT 12" O.C
4 600S162-43 STEEL STUDS AT 24" O.C.
5 (4) #10 SCREWS
6 STEEL ROOF DECK PER PLAN W/ #10 SCREWS AT 12" O.C. INTO JOISTS
7. 2x BLOCKING AT EA FLUTE
8. BLOCK BETWEEN JOISTS AT BEARING POINT

43 FRAMING AT OVERBUILD
NO SCALE

REVISIONS
1 PLANS CHECK 6/1/04
2 STRUCT-ARCH COORDINATION 12/21/04

CONSULTANT

STRUCTURAL SOLUTIONS ENGINEERING
6380 S. VALLEY VIEW, STE 406
LAS VEGAS, NEVADA 89118
Phone: (702) 616-3107
Fax: (702) 616-3725

JOB NUMBER: LV03191

THIS PLAN IS A VISUAL SYSTEM OF INTERCONNECTING STRUCTURAL SOLUTIONS. ALL RIGHTS ARE RESERVED. NO PART MAY BE REPRODUCED IN ANY FORM WITHOUT WRITTEN CONSENT. ALL RIGHTS ARE RESERVED. COPYRIGHT 2003 ENGINEERING STRUCTURAL SOLUTIONS

DEPARTMENT OF PUBLIC WORKS

CITY OF LAS VEGAS, NV
FIRE STATION #8
805 N. MOJAVE RD. LAS VEGAS, NV 89101

ROOF FRAMING DETAILS

STAMP

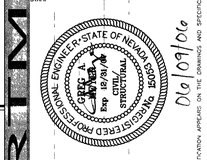

01/09/01

OWNER: CITY OF LAS VEGAS
DEPARTMENT OF PUBLIC WORKS
ARCHITECTURAL SERVICES

400 EAST STEWART AVENUE
LAS VEGAS, NEVADA 89101
PHONE: (702) 229-6535
FAX: (702) 382-3232
TDD: (702) 386-9108

DRAWN	JDB
FILE	LV03191
DATE	4/3/04
SCALE	3/4"=1'-0"
MID NO	-
CLV DWG NO	-
SHT NO	080

S4.4

DRAWINGS AS INSTRUMENTS OF SERVICE ARE THE PROPERTY OF THE DESIGN PROFESSIONAL WHOSE STAMP OF CERTIFICATION APPEARS ON THE DRAWINGS AND SPECIFICATIONS. ANY USE OR REPRODUCTION IN WHOLE OR IN PART WITHOUT WRITTEN CONSENT IS STRICTLY PROHIBITED. THIS DOCUMENT IS STRICTLY PROPRIETARY FOR ANCH THEY WERE PREPARED AND NOT FOR THE CONSTRUCTION OF ANY OTHER PROJECT IN A 6.032 TRS