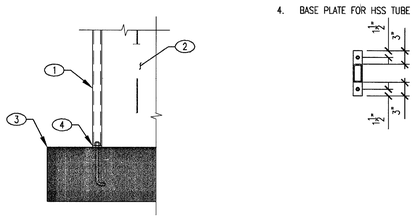

KEYNOTES:

1. HHS 4x2x1/4
2. MASONRY WALL
3. FOOTING
4. BASE PLATE FOR HSS TUBE

13 4x2 HSS AT MASONRY WALL
NO SCALE

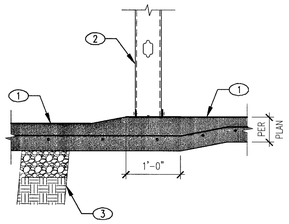

KEYNOTES:

1. SLAB ON GRADE PER PLAN. MAINTAIN MIN THICKNESS
2. INTERIOR NON-BEARING WALL AS OCCURS ANCHOR PER TYPICAL CONNECTION DETAIL
3. SUBGRADE PREPARATION PER GSN

9 SLOPED SLAB
NO SCALE

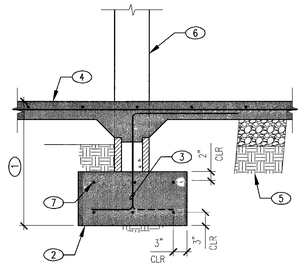

KEYNOTES:

1. MIN EMBEDMENT PER GSN
2. FOOTING PER PLAN AND/OR SCHEDULE
3. #4 DOWELS AT 24" O.C W/ STD HOOK AT BASE BEND INTO SLAB TO LAP REINFORCING 18" MIN
4. SLAB AND REINFORCING PER PLAN
5. SUBGRADE PERPARATION PER GSN
6. CMU WALL BEYOND
7. PROVIDE (3) #5 TOP BARS AT OPENING WIDTHS GREATER THAN 5'-0"

5 INTERIOR FOOTING AT OPENING
NO SCALE

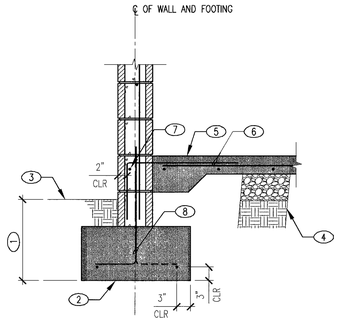

KEYNOTES:

1. MIN EMBEDMENT PER GSN
2. FOOTING PER PLAN AND/OR SCHEDULE
3. FINAL GRADE
4. SUBGRADE PERPARATION PER GSN
5. SLAB AND REINFORCING PER PLAN
6. #4 DOWELS AT 24" O C 24" 6"
7. HORIZ REINFORCING PER GSN
8. HOOKED DOWEL TO MATCH AND LAP VERTICAL REINFORCING. ALTERNATE HOOK DIRECTION

1 EXTERIOR MASONRY WALL AT FOUNDATION
NO SCALE

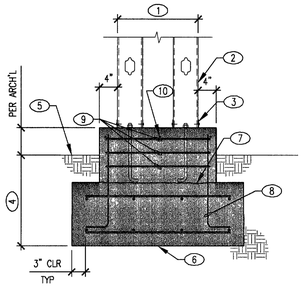

KEYNOTES:

1. STEEL STUD BOX COLUMN WIDTH PER ARCH'L
2. STEEL STUDS AT 16" O.C.
3. BOTTOM TRACK W/ 1/2" DIA AB AT 16" O.C.
4. MIN EMBEDMENT PER GSN
5. FINISH GRADE
6. FOOTING PER PLAN AND/OR SCHEDULE
7. ROUGHENED CONSTRUCTION JOINT
8. #4 DOWEL W/ STD HOOK AT 16" O.C.
9. (3) #3 CLOSED TIES AROUND A.B.
10. #4 LONGITUDINALS AT 18" O C.

14 METAL STUDS AT TRELLIS FOUNDATION
NO SCALE

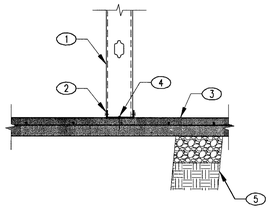

KEYNOTES:

1. NON BEARING STEEL STUD WALL
2. CONTINUOUS BOTTOM TRACK
3. SLAB PER PLAN
4. 1/4" SHOT PIN AT 24" O C. W/ 3/4" PENETRATION MIN
5. SUBGRADE PREPARATION PER GSN

9 SLOPED SLAB
NO SCALE

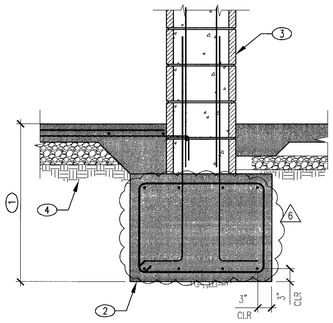

KEYNOTES:

1. MIN EMBEDMENT PER GSN
2. FOOTING PER PLAN AND/OR SCHEDULE
3. MASONRY JAMB PER PLAN AND/OR SCHEDULE. PROVIDE HOOKED DOWELS TO MATCH AND LAP VERT REINFORCING
4. SUBGRADE PREPERATION PER GSN

6 MASONRY WALL PILASTER AT FOUNDATION
NO SCALE

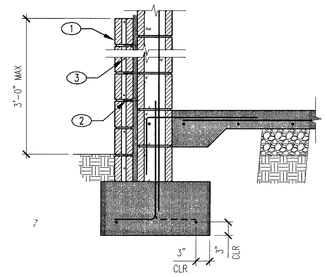

KEYNOTES:

1. VENEER PER ARCH'L
2. GALVANIZED SHEET METAL OR WIRE BRICK TIES AT 8" O C VERT AND 24" O.C. HORIZ
3. CONTINUOUS HORIZ #9 GALV WIRE AT 8" O C AT CENT OF HORIZ MORTAR JOINTS

NOTE:

A. FOR ITEMS SHOWN BUT NOT NOTED, SEE EXTERIOR MASONRY WALL AT FOUNDATION

2 CMU VENEER AT EXTERIOR MASONRY WALL
NO SCALE

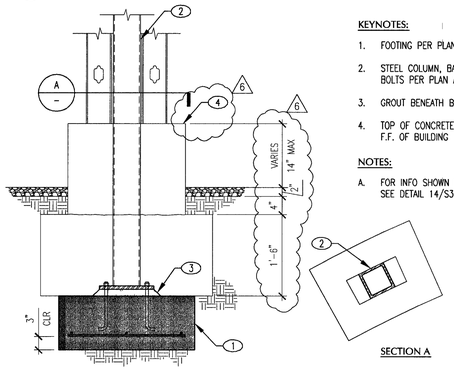

KEYNOTES:

1. FOOTING PER PLAN AND/OR SCHEDULE
2. STEEL COLUMN, BASE PLATE AND ANCHOR BOLTS PER PLAN AND/OR SCHEDULE
3. GROUT BENEATH BASE PLATE PER GSN
4. TOP OF CONCRETE PEDESTAL TO MATH F.F. OF BUILDING

NOTES:

A. FOR INFO SHOWN BUT NOT NOTED SEE DETAIL 14/S3 1

15 TRELLIS COLUMN AT FOUNDATION
NO SCALE

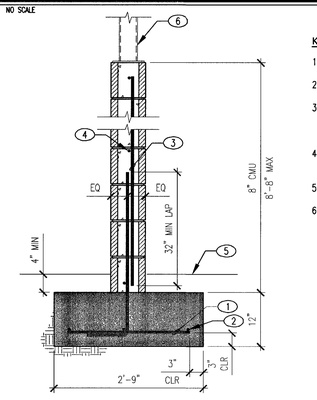

KEYNOTES:

1. #4 AT 18" O.C. TRANSVERSE
2. (3) #4 CONT BOTTOM
3. #5 VERTICALS AT 32" O.C. W/ HOOKED DOWELS AT FOUNDATION TO MATCH AND LAP
4. #5 HORIZ AT TOP AND BOTTOM AND AT 48" O.C.
5. FINISH GRADE
6. TRELLIS SUPPORT COLUMN AND ANCHORAGE PER ARCH'L

11 FENCE WALL AT BBQ AREA
NO SCALE

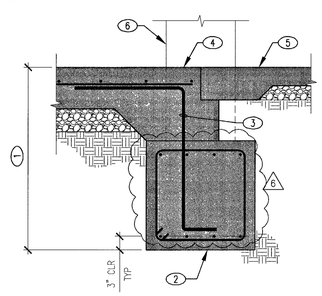

KEYNOTES:

1. #4 AT 18" O.C. TRANSVERSE
2. (3) #4 CONT BOTTOM
3. #5 VERTICALS AT 32" O.C. W/ HOOKED DOWELS AT FOUNDATION TO MATCH AND LAP
4. #5 HORIZ AT TOP AND BOTTOM AND AT 48" O.C.
5. FINISH GRADE
6. TRELLIS SUPPORT COLUMN AND ANCHORAGE PER ARCH'L

7 SLAB AT OPENING
NO SCALE

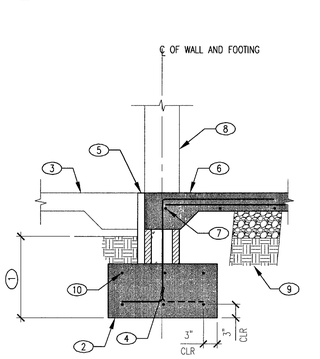

KEYNOTES:

1. MIN EMBEDMENT PER GSN
2. FOOTING PER PLAN AND/OR SCHEDULE
3. EXTERIOR SLAB OR FINAL GRADE
4. #4 AT 24" O.C W/ STD HOOK AT BASE. BEND INTO SLAB TO LAP 18" MIN
5. THRESHOLD BLOW-OUT
6. SLAB AND REINFORCING PER PLAN
7. #5 CONT
8. CMU WALL BEYOND
9. SUBGRADE PREPARATION PER GSN
10. PROVIDE (3) #5 TOP BARS AT OPENINGS WIDTHS GREATER THAN 5'-0"

3 SLAB EDGE
NO SCALE

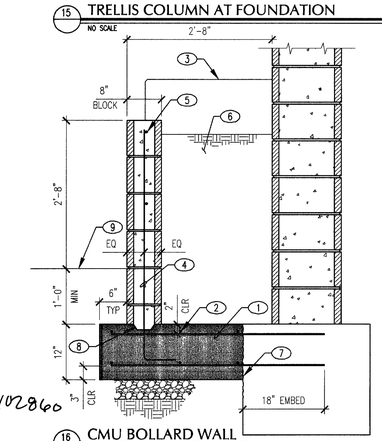

KEYNOTES:

1. #4 TRANSVERSE AT 12" O C T&B EMBED IN WALL FOOTING AS SHOWN
2. #4 AT 18" O.C. T&B.
3. CONCRETE CAP PER ARCH'L DWGS
4. #5 DOWELS AT 24" O.C. W/ HOOK AT BASE
5. #5 HORIZ AT TOP AND AT 24" O.C.
6. COMPACTED TYPE II FILL
7. ROUGHENED CONSTRUCTION JOINT AT OPTIONAL TWO POUR
8. PROVIDE 1" DEEP x 4" WIDE KEY
9. EXTERIOR SLAB

NOTES:

A. REFER TO DETAIL 6/S3.1 FOR ITEMS SHOWN BUT NOT NOTED

16 CMU BOLLARD WALL
NO SCALE

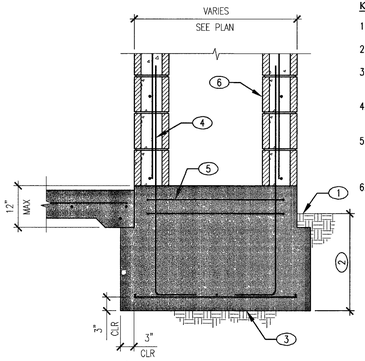

KEYNOTES:

1. FINISH GRADE PER ARCH
2. MIN EMBEDMENT PER GSN
3. FOOTING PER PLAN AND/OR SCHEDULE
4. HOOKED DOWELS AT FDN TO MATCH AND LAP WALL REINFORCING
5. (2)#4 TIES AT TOP 6"
6. CMU WALL SEE PLAN FOR REINFORCING

12 MASONRY COLUMN AT FOUNDATION
NO SCALE

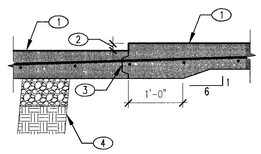

KEYNOTES:

1. SLAB ON GRADE PER PLAN MAINTAIN MIN THICKNESS
2. STEP PER ARCH
3. CONSTRUCTION JOINT
4. SUBGRADE PERPARATION PER GSN

8 SLAB RECESS
NO SCALE

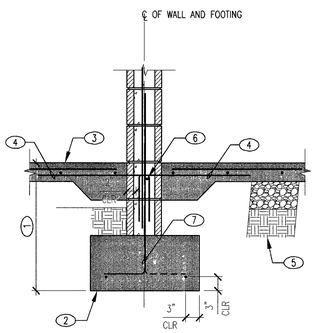

KEYNOTES:

1. MIN EMBEDMENT PER GSN
2. FOOTING PER PLAN AND/OR SCHEDULE
3. SLAB AND REINFORCING PER PLAN
4. #4 DOWELS AT 24" O.C. 24" 6"
5. SUBGRADE PERPARATION PER GSN
6. HORIZ REINFORCING PER GSN
7. HOOKED DOWEL TO MATCH AND LAP VERTICAL REINFORCING. ALTERNATE HOOK DIRECTION

4 INTERIOR MASONRY WALL AT FOUNDATION
NO SCALE

REVISIONS

1	PLANS CHECK	5/12/04
2	PLANS CHECK	6/1/04
3	STRUCT-ARCH COORDINATION	12/21/04

CONSULTANT

6380 S. VALLEY VIEW, STE 406
LAS VEGAS, NEVADA 89118
Phone: (702) 616-3107
Fax: (702) 616-5725
STRUCTURAL SOLUTIONS ENGINEERING

THESE PLANS, DRAWINGS AND DESIGNS ARE THE EXCLUSIVE PROPERTY OF ENGINEERING STRUCTURAL SOLUTIONS, ALL SHALL BE RETURNED UPON REQUEST. THE REPRODUCTION, PUBLICATION OR USE OF THESE PLANS, DRAWINGS AND DESIGNS BY OTHERS IS PROHIBITED. ALL RIGHTS ARE RESERVED. COPYRIGHT 2003 ENGINEERING STRUCTURAL SOLUTIONS.

JOB NUMBER. LV03191

DEPARTMENT OF PUBLIC WORKS

CITY OF LAS VEGAS, NV
FIRE STATION #8
805 N. MOJAVE RD. LAS VEGAS, NV 89101

FOUNDATION DETAILS

STAMP

REGISTERED PROFESSIONAL ENGINEER STATE OF NEVADA
JOHN D. BOLLER
No. 9031
Exp. 12/31/04
CIVIL
06/09/04

OWNER: CITY OF LAS VEGAS
DEPARTMENT OF PUBLIC WORKS
ARCHITECTURAL SERVICES

400 EAST STEWART AVENUE
LAS VEGAS, NEVADA 89101
PHONE: (702) 229-6535
FAX: (702) 382-3232
TDD: (702) 386-6108

DRAWN	JDB
FILE	LV03191
DATE	4/9/04
SCALE	3/4"=1'-0"
STD NO	-
CLV DWG NO	-
	075
SHT NO	S3.1

DRAWINGS AND INSTRUMENTS OF SERVICE ARE THE PROPERTY OF THE DESIGN PROFESSIONAL WHOSE STAMP OF CERTIFICATION APPEARS ON THE DRAWINGS AND SPECIFICATIONS. ANY USE OR REPRODUCTION IN WHOLE OR IN PART WITHOUT WRITTEN CONSENT IS STRICTLY PROHIBITED. COPIES OF THE DRAWINGS AND SPECIFICATIONS RETAINED BY THE CLIENT MAY BE UTILIZED ONLY FOR OCCUPYING THE PROJECT FOR WHICH THEY WERE PREPARED AND NOT FOR THE CONSTRUCTION OF ANY OTHER PROJECT. N.A.C. 623.760.