This document, including the ideas and designs it contains, is an instrument of professional services rendered by the Architect / Engineer. This document may not be used or copied in whole, or in part, for any purpose other than this specific project without the expressed written consent of Westar Architectural Group, Inc.

SYMBOL LIST

- FLUORESCENT FIXTURE
- FLUORESCENT FIXTURE
- FLUORESCENT FIXTURE
- DOWNLIGHT FIXTURE.
- FLOOD LIGHT
- WALL MOUNTED FIXTURE.
- EXIT SIGN W/ DUAL HEADS - UNIVERSAL MOUNTED
- FLUORESCENT FIXTURE CONNECTED TO EXISTING BUILDING COMPUTER AIDED DISPATCH LIGHTING CONTROLLER AND TIME DELAY
- FLUORESCENT FIXTURE WITH EMERGENCY BATTERY UNIT
- A — LETTER INDICATES LIGHT FIXTURE AS INDICATED ON FIXTURE SCHEDULE
- S — SINGLE POLE SWITCH @ +48" UNLESS NOTED.
- S3 — 3-WAY SWITCH @ +48" UNLESS NOTED
- DUPLEX RECEPTACLE @ +18" UNLESS NOTED.
- GFI DUPLEX RECEPTACLE UNLESS NOTED +42"
- DOUBLE DUPLEX RECEPTACLE @ +18" UNLESS NOTED.
- TELEPHONE OUTLET@ +18" UNLESS NOTED.
- DATA OUTLET@ +18" UNLESS NOTED.
- S — LANDLINE VOCAL SYSTEM
- SPECIAL RECEPTACLE
- PANEL BOARD
- DD — DUCT DETECTOR
- SD — SMOKE DETECTOR.
- TV — TV OUTLET
- S — LIGHTING SENSOR
- V — VOLUME CONTROL @ +48"
- SS — RADIO VOCAL SYSTEM SPEAKER
- S — COMBINATION FIRE ALARM HORN WITH ADA STROBE.
- T — THERMOSTAT OUTLET @ +48" UNLESS NOTED.
- J — JUNCTION BOX.
- FUSED DISCONNECT SWITCH.- SIZE AS INDICATED.
- EF 1 — MECHANICAL EQUIPMENT CONNECTION, SEE SCHED. ON MECH. PLAN
- CONDUIT RUN CONCEALED IN WALL OR ABOVE CEILING.
- CONDUIT RUN BELOW FLOOR OR GRADE
- A-135 — HOMERUN: TO PANEL A, CIRCUITS 1,3,5.
- 1/2" - 2 #12 THHN/THWN UNLESS NOTED
- 1/2" - 3 #12
- 1/2" - 4 #12
- 3/4" - 5 #10
- 3/4" - 6 #10

DOES NOT INCLUDE GROUND WIRE. IF REQUIRED ADD CODE SIZE GROUND

- CIRCUITING-STROKE WITH DOT INDICATES GROUNDING CONDUCTOR.
- E — EXISTING CONDUIT AND/OR WIRE TO REMAIN.
- X — EXISTING CONDUIT AND/OR WIRE TO BE REMOVED OR ABANDONED.

ADA	INDICATES AMERICAN DISABILITIES ACT
AFF	ABOVE FINISHED FLOOR
C	CONDUIT W/ PULL LINE ONLY
EC	ELECTRICAL CONTRACTOR
EM	EMERGENCY
F.B.O.	FURNISHED BY OTHERS
G.F.I	GROUND FAULT CIRCUIT INTERRUPTER
PNL	PANEL
U.N.O.	UNLESS NOTED OTHERWISE
W.P.	WEATHER-PROOF (NEMA 3R)
+18"	MOUNTING HEIGHTS ARE TO CENTERLINE OF DEVICE ABOVE FINISH FLOOR OR FINISH GRADE. VERIFY EXACT MOUNTING HEIGHTS PER ADA REQUIREMENTS.

SIGNAL SYSTEM DEVICE LEGEND

(S) LANDLINE VOCAL SYSTEM SPEAKER - QUAM #CIØX/BU/W (SPEAKER LINE LANDLINE VOCAL SYSTEM LINE MATCH TRANSFORMER AND GRILL) WITH QUAM ERD-81ST ENCLOSURE WITH QUAM SSB-2 SPEAKER SUPPORT BRIDGE. CENTER ALL (WHITE) GRILLS IN CEILING TILES.

(SS) RADIO VOCAL SYSTEM SPEAKER - QUAM #CIØX/BU/W (SPEAKER LINE LANDLINE VOCAL SYSTEM LINE MATCH TRANSFORMER AND GRILL) WITH QUAM ERD-81ST ENCLOSURE WITH QUAM SSB-2 SPEAKER SUPPORT BRIDGE. CENTER ALL (WHITE) GRILLS IN CEILING TILES.

(V) SPEAKER VOLUME CONTROL - ATLAS/SOUNDOLIER AT75 SET IN FLUSH 2-GANG J-BOX WITH SINGLE GANG RING AT +48" ABOVE FINISHED FLOOR.

(D) (2) HUBBELL HXJ6B ANGLED RJ45 (2) HUBBELL HXJUGY RJ-11 ANGLED JACKS, WITH HUBBELL FACE PLATE IMFIW FRAME WITH (2) IM2KAIBW MODULES SET IN 2 GANG J-BOX WITH SINGLE GANG RING WITH (2) 4 PAIR CATEGORY 6 WIRING TERMINATED TO T568B WIRING STANDARD (DATA) AND (2) 4 PAIR CATEGORY 3 TERMINATED TO SPRINT TELEPHONE SPECIFICATIONS. +18" U.N.O. (CERTIFY DATA TERMINATIONS)

(TV) (1) HUBBELL SFFWX COAX JACK, (3) HUBBELL BLANK JACK WITH HUBBELL FACE PLATE IMFIW FRAME WITH (2) IM2KAIBW MODULES SET IN J-BOX WITH RG-6/U 75 OHM COAX CABLE TERMINATE AT COUPLER AND TTB PER COX CABLE SPECIFICATIONS.

FIXTURE SCHEDULE

F.S. 2,7,9 — ABF 01-082

FIXT. TYPE	MANUFACTURER NAME	MANUFACTURER CAT. NO. (1)	VOLT AMPS	MTG. (2)	MTG. HT.	LAMP TYPE	REMARKS	VOLT-AGE
A	LITHONIA	2SP8G332A121201/3GEB	90	REC	-	3-F32T8-841	3 LAMP 2x4 TROFFER T-BAR	120
AE	LITHONIA	2SP8G332A121201/3GEB EL14	90	REC	-	3-F32T8-841	SAME AS TYPE 'A' EXCEPT WITH EMERGENCY EMERGENCY BATTERY PACK LITHONIA P91400	120
B	LITHONIA	2SP8G3CF40A121201/3GEB	90	REC	-	3-40WTT5	3 LAMP 2x2 TROFFER	120
C	LITHONIA	TAF8T332120 1/3GEB	180	SURF	-	6-F32T8-841	TURRET (2) 4'-0" INDUSTRIAL FIXTURE DOUBLE LENGTH	120
D	LITHONIA	LP6-6LFI	40	REC	-	40W A19	SHOWER LIGHT	120
E	LITHONIA	LESWIR120	10	SURF	-	FURN W/ UNIT	LED EXIT SIGN WITH EMERGENCY BATTERY UNIT	120
F	LITHONIA	WM232A12120GEBWH	60	WALL	VERIFY	2-F032T8	4FT UP & DNLT W/ PULL CHAIN	120
G	LITHONIA	2SP8F332A121201/3GEB	90	REC	-	3-F32T8-841	3 LAMP 2x4 TROFFER GYP CEILING	120
H	GREENLEE	L54DUEBRZAMJBI	90	WALL	-	2-54W T5HO	FLUOR LINEAR FLOOD LIGHT WITH INTEGRAL BALLAST	120
J	LITHONIA	W-232 -GEB	60	WALL	ABV MIRROR	2-F32T8-841	2 LAMP 4FT WALL BRACKET	120

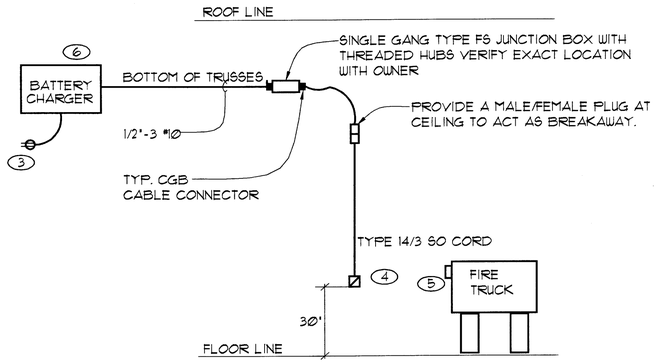

BATTERY CHARGER CONNECTION DETAIL (1/ED.1)

1/8" = 1'-0" — TYPICAL FOR FIRE STATIONS 2,7 &9

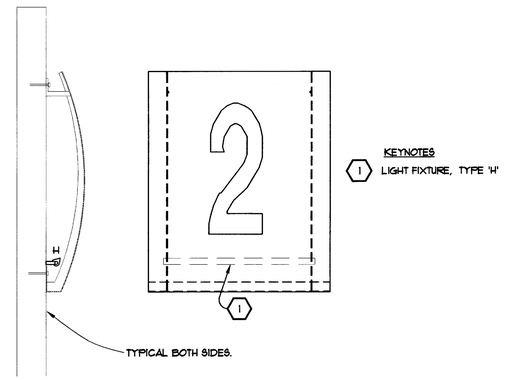

ELECTRICAL SIGN DIAGRAM (2/ED.1)

NO SCALE — FIRE STATION #2

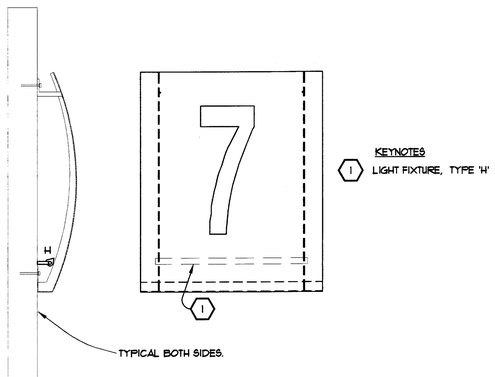

ELECTRICAL SIGN DIAGRAM (3/ED.1)

NO SCALE — FIRE STATION #7

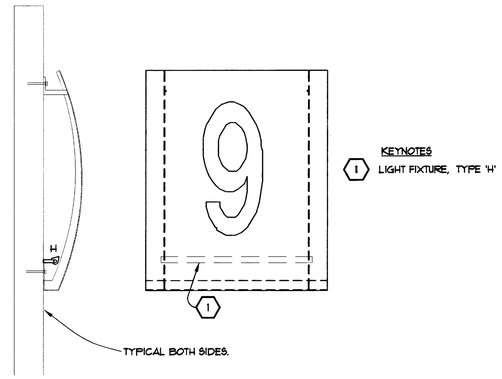

ELECTRICAL SIGN DIAGRAM (4/ED.1)

NO SCALE — FIRE STATION #9

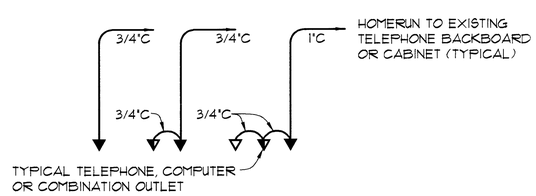

TYPICAL AUXILIARY CONDUIT DIAGRAM (5/ED.1)

NO SCALE

NOTES

1. CATALOG NUMBER INDICATES BASIC FIXTURE TYPE REQUIRED, VERIFY WITH MANUFACTURER TO INCLUDE ALL ACCESSORIES FOR THIS PROJECT.
2. VERIFY WITH ARCHITECTURAL REFLECTED CEILING PLANS, SECTIONS, ETC. PRIOR TO ORDERING FIXTURES.
3. DUPLEX RECEPTACLE MOUNTED AT +84"
4. FEMALE PLUG-LEVITON 15A.-250V. GROUND NEMA 6-15R. WIRED FOR 12 VOLTS ON TWO PRONGS AND GROUND.
5. TRUCK MOUNTED REVERSE SERVICE (15A-12VOLT) WITH AUTO EJECT CAPABILITY (BY OWNER)
6. CONTRACTOR TO PROVIDE 10/2 AMP CHARGER FOR 55 AMPS STARTER (SOLAR MODEL # 1060-6/12V). PROVIDE 12"X12"X3/4" MELAMINE WALL SHELF AND SUPPORT AT 84" FOR BATTERY CHARGER (TYP 1 EACH PER FIRE STATION.

LIST OF DRAWINGS

ED.1	SYMBOL LIST & FIXTURE SCHEDULE
ED.2	SPECIFICATION HIGHLIGHTS
ED.3	SINGLE LINE DIAGRAMS & SCHEDULES
ES.2	ELECTRICAL SITE PLAN STATION #2
ES.7	ELECTRICAL SITE PLAN STATION #7
ES.9	ELECTRICAL SITE PLAN STATION #9
E1.2	LIGHTING PLAN STATION #2
E2.2	POWER & AUXILIARY PLAN STATION #2
E1.7,9	LIGHTING PLAN STATIONS #7,9
E2.7,9	POWER & AUXILIARY PLAN STATIONS #7,9

AS BUILT 8/23/04

ABF CONSULTING ENGINEERS
Las Vegas, Nevada 89103 Tel:(702)248-0338
Sparks, Nevada 89431 Tel:(775)674-2222
Phoenix, Arizona 85014 Tel:(602)274-1801
THE ENGINEER ACCEPTS NO LIABILITY NOR RESPONSIBILITY FOR THESE DOCUMENTS UNLESS THEIR ORIGINAL SEAL, SIGNATURE IS AFFIXED. (SUPERVISION REQUIRED)

SEAL — FINAL

W·E·S·T·A·R
ARCHITECTURAL GROUP, / NEVADA INC.
LAS VEGAS • PHOENIX
ARCHITECTURE • PLANNING • PROJECT MANAGEMENT
3900 MEADOWS LANE SUITE 220 LAS VEGAS, NEVADA 89107
TELEPHONE: (702) 878-0000 FAX: (702) 878-8430
WESTAR

A FACILITY IMPROVEMENT FOR:
FIRE STATION 2, 7, & 9
LAS VEGAS, NEVADA

NUMBER	REVISION DESCRIPTION	DATE

PROJECT NUMBER: 01833
DRAWN BY: N.L.B.
CHECKED BY: GGG
ISSUE DATE: 09-13-01
SCALE: NONE
SHEET NUMBER: ED.1

630.99 630.99-2,7,9 #01-082